Step Up Wide

TECHNOLOGY

Flow Sense

A built-in protector against power-related issues, ensuring lasting performance and safety.

Split & Seal

Uses protective polymers to shield Filix products from water and moisture, boosting durability and resilience.

Heat Sense

Automatically reduces LED power at high temperatures, ensuring longevity and safety in Filix products.



Step Up Wide

Specification Sheet



UL STD 1598
IP67

LUMINAIRE FEATURES

Design and Application

- Linear recessed uplight
- Architectural and landscape lighting
- Marker light effect

Mechanical details

- IK10 tempered glass, crystal clear
- Chasing light 100mm (3.9”) increment
- Continuous run of standard lengths
- AISI304L stainless steel body
- Snap in installation with no exposed hardware
- Wet location, drive over rated 5000 kg (11000lb)
- Supplied with oil and water resistant feed cable that mateches a length of a fixture
- Recessed floor/wall installation

Electrical details

- LED Lifetime TM-21 @ 85°C
  L90(9K) = 60,500 hours
- Operating temperature: -20°C (-28°F) to +40°C (104°F)
- LED CRI: >85
- 2 step MacAdam

Sustainabilty

- Recyclable materials
- Replaceable LED module

Controls

- DMX, with compatible LED power supply
- DALI, with compatible LED power supply
- 0-10V, with compatible LED power supply
- Mains, with compatible LED power supply

Integrated systems

- Split & Seal
- Flow Sense
- Heat Sense

Links & Downloads

- List of available drivers
- Voltage drop calculator
- Fixture installation manual
- Housing installation manual
- CAD files
- IES-LTD data

Step Up Wide

ORDERING INFORMATION

	MODEL	
●	**SLW**	
	LENGHT	
○	**400**	• 400mm (15,7”)
○	**1000**	• 1000mm (39,4”)
	POWER	
○	**L**	• L - 10W/m, 3W/ft Amber, 2700K, 3000K, (900lm)
○	**H**	• H - 23W/m, 7,6W/ft Amber, 2700K, 3000K, (1700lm)
		• L - 10W/m, 3W/ft RGBWA , RGBWA
		• H - 23W/m, 7,6W/ft RGBWA , RGBWA
	COLOR TEMP.	
○	**A**	• A - Amber
○	**30**	• 30 - 3000K
○	**RGBW**	• RGBW (W 3000K)
○	**RGBWA**	• RGBW+A (Amber) (W 3000K)
	OPTICS	
○	**LL**	• LL = 120° even illumination
	VOLTAGE	
○	**24**	• 24 - 24VDC fixture voltage
○	**230**	• 230 - 230VAC
○	**110**	• 110 - 110 - 277VAC

Filix reserves the right to make technical changes without notice.

Step Up Wide

MANDATORY ACCESSORIES

Housings

HOUSING	
SW400	• SW400 - Installation housing of SLW400
SW1000	• SW1000 - Installation housing of SLW1000

Power supplies

DRIVERS	
LINK	• List of available drivers

OPTIONAL ACCESSORIES

200886	• Removal tool

Step Up Wide

INSTALATION DETAILS

Fixture

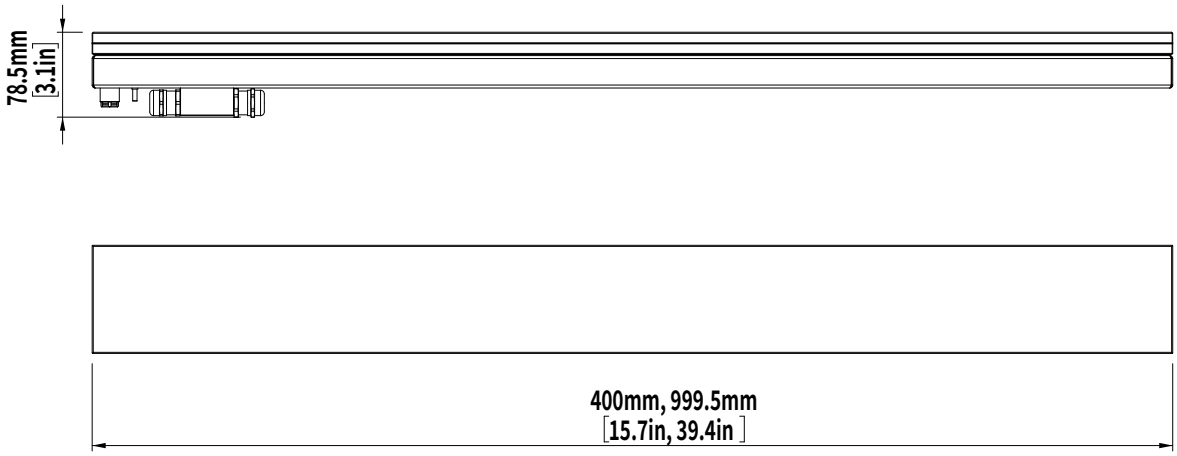

Note:
For details on specific depths, tiling thickness and other please refer to both Installation instructions for fixture and housing.

Filix reserves the right to make technical changes without notice.

Step Up Wide

INSTALATION DETAILS

Housing

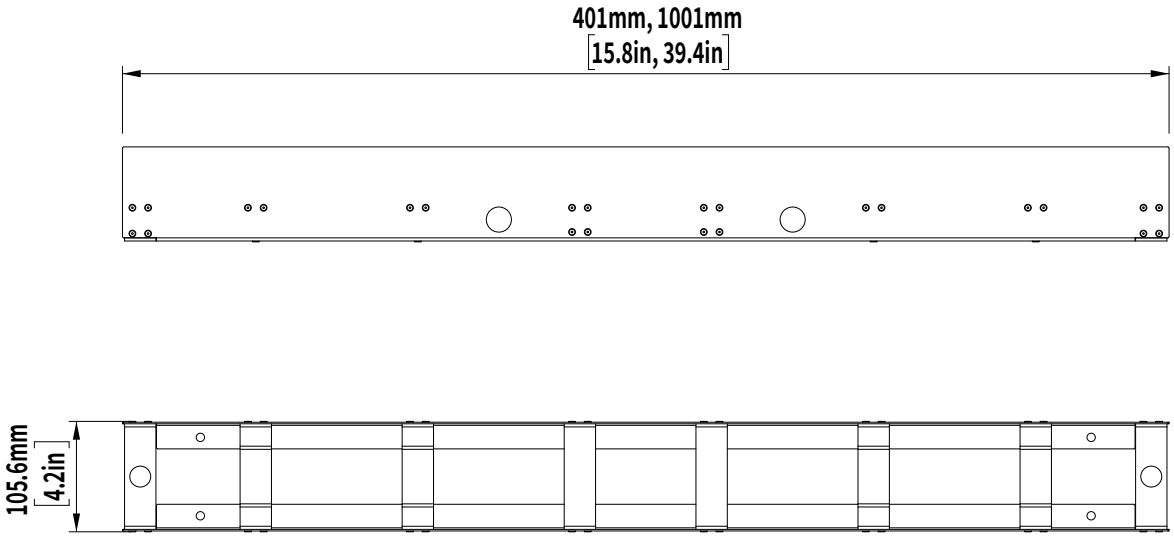

Note:
For details on specific depths, tiling thickness and other please refer to both Installation instructions for fixture and housing.

Filix reserves the right to make technical changes without notice.

Step Up Wide

MANDATORY ACCESSORIES

Stainless steel installation housing

Used to niche and to seamlessly integrate luminaire utilizing precision press fit with no exposed hardware. Made out of stainless steel with single cable entry and suitable for marine and pool environments. Standard features include a 1.5m oil and water-resistant cable conduit,streamlining the installation process. Due to its size, the housing's back end intentionally lacks a sealed cable gland. Contractors are advised to review installation instructions for proper guidance.

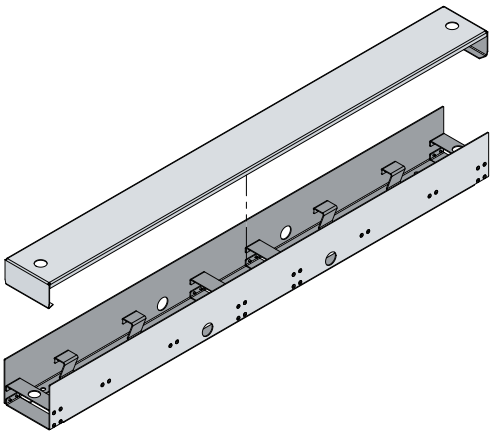

Power supply

A LED power supply, is an electrical device designed to control the power supplied to an LED or an array of LEDs. It plays a critical role in LED lighting systems as LEDs demand a specific type and level of electrical current or voltage for optimal operation. It's important to note whether a constant current or constant voltage LED power supply is required. The power supply should be installed in a dry and easily accessible area.

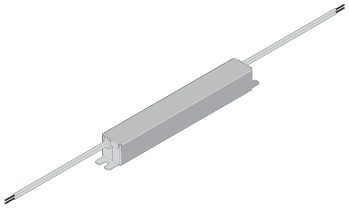

Filix reserves the right to make technical changes without notice.

Step Up Wide

OPTIONAL ACCESSORIES

Removal tool

Equipped with a specialized suction mechanism, it securely adheres to glass surfaces, ensuring safe and precise lifting and handling operations. This tool is essential for various applications where a reliable and controlled grip is paramount, promoting efficiency and workplace safety.

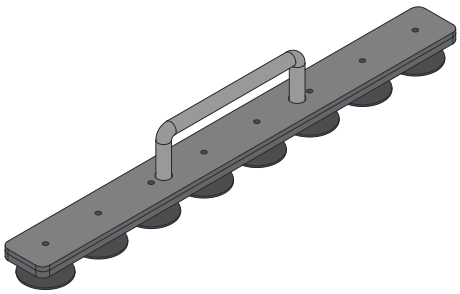

Filix reserves the right to make technical changes without notice.

Control

ON/OFF SYSTEM TOPOLOGY

Integrated systems:

- Flow Sense
- Heat Sense
- Split & Seal

System components

- Wiring, protective devices and junction boxes leading up to feed cable at the start of the line are the responsibility of others

System topology

- In the system design, any of the following system topologies can be utilized: line wiring, star wiring, or tree wiring.

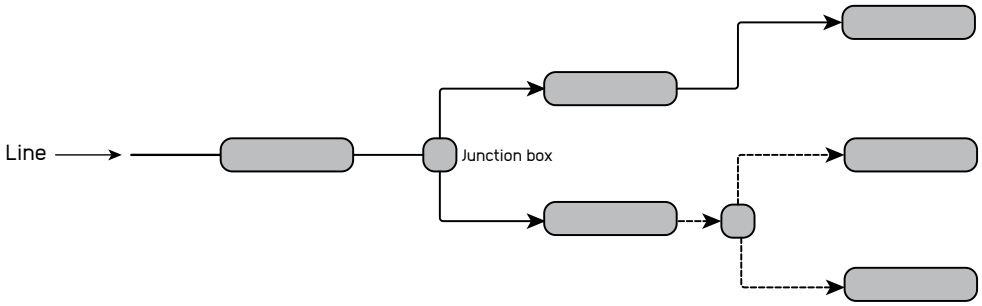

Addressing & dimming notes

- ON/OFF system does not allow device addressing
- Dimming of the product not avaliable in this system

Segment length and limitations

- The maximum distance between the first and last fitting is limited to maximum voltage drop and fuse rating.
- Used only in single colour applications

Fault tolerance

- If one product fails the rest of the system continues to work
- Class III wiring implemented in the fixture and voltage fluctuation filter implemented

Control

0-10V SYSTEM TOPOLOGY

Integrated systems:

- Flow Sense
- Heat Sense
- Split & Seal

System components

- The 0-10V system, wiring, protective devices and junction boxes leading up to feed cable at the start of the line are the responsibility of others

System topology

- In the system design, any of the following system topologies can be utilized: line wiring, star wiring, or tree wiring.

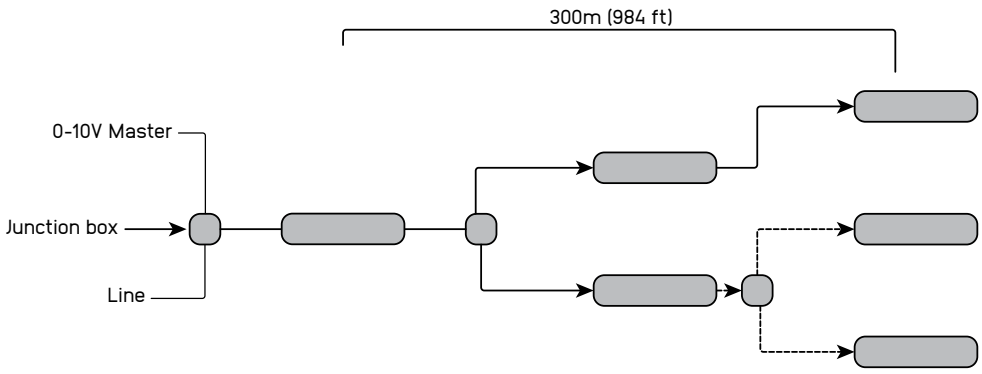

Addressing & dimming notes

- 0-10V protocol does not allow addressing devices individually
- Logharitmic and linear dimming options avaliable. The product is initially equipped with logarithmic dimming settings and it is suggested for the controlers to be linear in order to get the dimming that is most preffered in most cases due to the dimming curve percieved by human eye
- 0%-100% dimming range
- The product is initally set up as a source instead of as a sink type
- The product could also be set up as a sink type but this should be noted to sales represenative

Segment length and limitations

- The maximum distance between two fittings is 30 meters, and the maximum distance between the first and last fitting is 300 meters.
- Used in signle colour applications

Fault tolerance

- If the product is source type and in the case the control line doesn't have power the light fitting will turn at 100%. in the opposite case where the light is sink type, light will not work.
- If one product fails the rest of the system continues to work
- Class III wiring implemented in the fixture and voltage flxtuation filter implemented

Control

DALI SYSTEM TOPOLOGY

Integrated systems:

- Flow Sense
- Heat Sense
- Split & Seal

System components

- The DALI system, wiring, protective devices and junction boxes leading up to feed cable at the start of the line are the responsibility of others

System topology

- In the system design, any of the following system topologies can be utilized: line wiring, star wiring, or tree wiring.

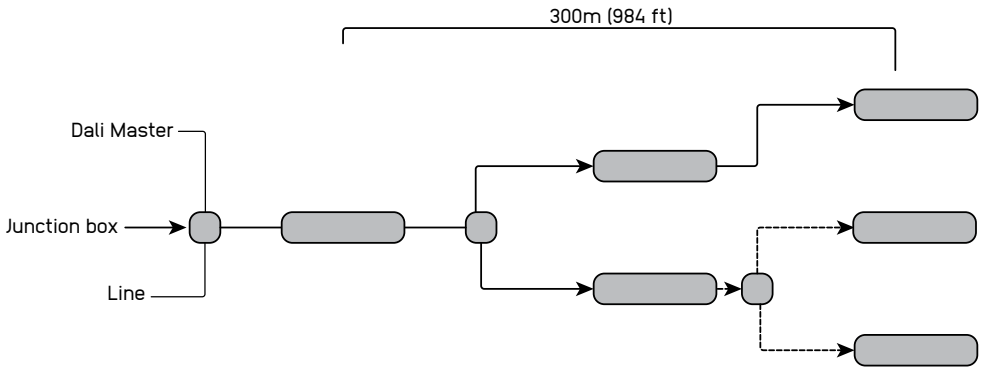

Addressing & dimming notes

- DALI protocol allows addressing devices individually
- Addressing methods include a short address for individual devices, group addresses for up to 16 groups, and a broadcast address that targets everything on the line.
- Logharitmic and linear dimming options avaliable. the product is initially equipped with logarithmic dimming settings, while you can easily switch to logarithmic dimming using a configuration device.
- 0%-100% dimming range

Segment length and limitations

- A DALI master has the capacity to manage a line containing a maximum of 64 devices. Each device can be allocated to 16 unique groups and 16 individual scenes.
- The maximum distance between two fittings is 30 meters [98ft] , and the maximum distance between the first and last fitting is 300m [984ft).
- Used in single colour and tunable white applications

Fault tolerance

- Due to its relatively slow operating speed and high bus voltage, the DALI system exhibits significant reliability in the presence of electrical interference, making shielding unnecessary
- If one product fails the rest of the system continues to work

Control

DMX SYSTEM TOPOLOGY

Integrated systems:

- Flow Sense
- Heat Sense
- Split & Seal

System components

- The DMX system, wiring, protective devices and junction boxes of the line are the responsibility of others

System topology

- In the system design, line wirinig can only be used

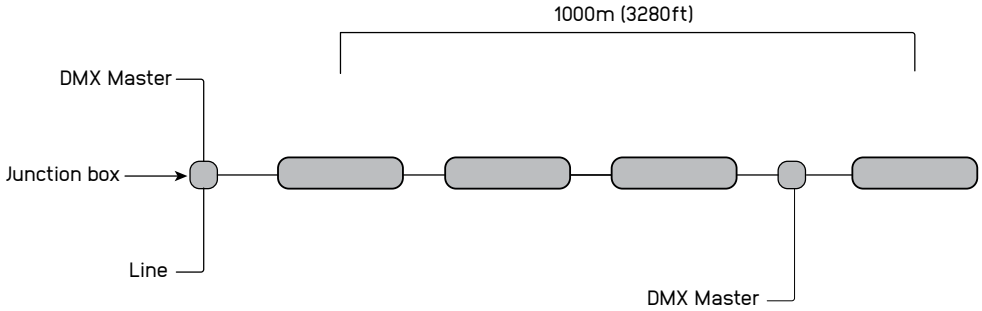

Addressing & dimming notes

- DMX protocol allows addressing devices individually
- Addressing methods allow short address for individual devices
- Logharitmic and linear dimming options avaliable. the product is initially equipped with logarithmic dimming settings, while you can easily switch to logarithmic dimming using a configuration device.
- 0%-100% dimming range

Segment length and limitations

- A DMX univerese has the capacity to manage a line containing a maximum of 512 addresses. Each Luminaire can be allocated to maximum 4 unique addresses.
- The maximum distance between two fittings is 30m (98ft), and the maximum distance between the first and last fitting is 1000 meters.
- Used in single colour, tunable white, and RGBW applications
- DMX addresses can be programmed in factory or on site. Consult your sales representative if addressing is to be done in factory

Fault tolerance

- If one product fails the rest of the system continues to work