FILIX
FILIX LIGHTING USA INC

Arpool L

TECHNOLOGY

Flow Sense

A built-in protector against power-related issues, ensuring lasting performance and safety.

Split & Seal

Uses protective polymers to shield Filix products from water and moisture, boosting durability and resilience.

Heat Sense

Automatically reduces LED power at high temperatures, ensuring longevity and safety in Filix products.

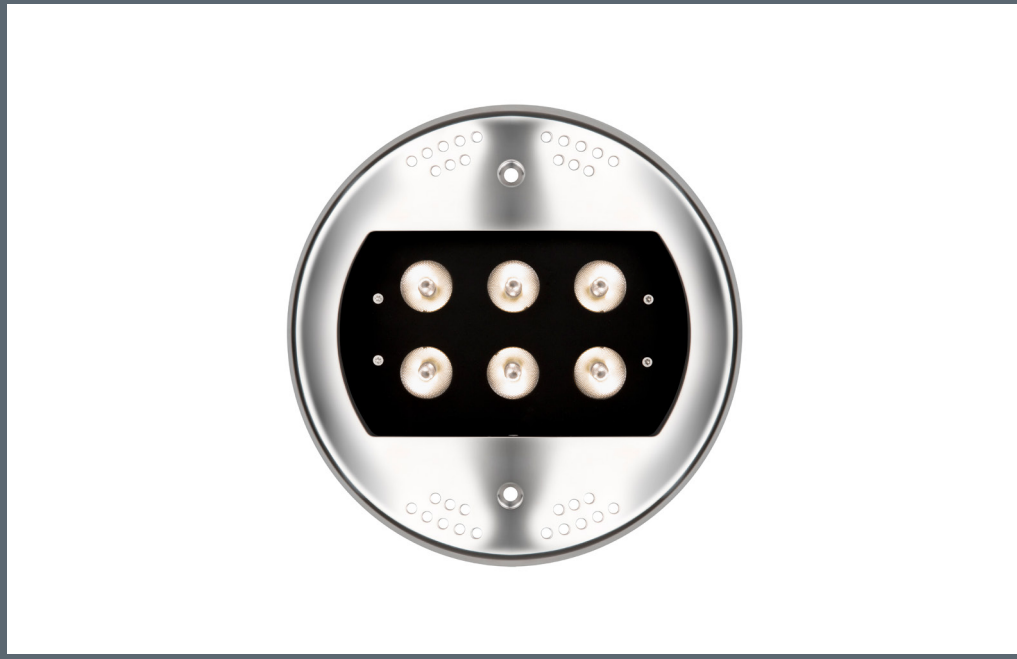

Arpool L

Specification Sheet

UL STD 676 swimming pool rated
CSA C22.2#89 swimming pool rated
IP68

LUMINAIRE FEATURES

Design and Application

- Large-scale pools and water features
- High output recessed spotlight

Mechanical details

- IK10 crystal-clear tempered glass, 10mm (0.39") thick
- IP68, rated for permanent submersion
- Maximum installation depth up to 3m (10')
- AISI316L stainless steel body
- Suitable for chlorine and marine environments
- Supplied with 3m(10') oil and water resistant feed cable as standard
- Recessed installation secured with A4 grade srews
- Equipotential bonding point available with stainless steel housing

Electrical details

- LED Lifetime TM-21 @ 105°C L80(24K) = 145,000 hours
- Operating temperature: -20°C (-28°F) to +50°C (122°F)
- LED CRI: >85
- 3 step MacAdam
- Remote power supply
- Low voltage operation

Sustainabilty

- Recyclable material

Controls

- DMX, with compatible LED power supply
- DALI, with compatible LED power supply
- 0-10V, with compatible LED power supply
- Mains, with compatible LED power supply

Integrated systems

- Split & Seal
- Flow Sense
- Heat Sense

Links & Downloads

- List of available drivers
- Voltage drop calculator
- Fixture installation manual
- Housing installation manual
- CAD files
- IES-LTD data

Note

Underwater luminaire – must be constantly submersed.

Arpool L

ORDERING INFORMATION

MODEL	
FAL	
APPLICATION	
TM	• TM = Ø240mm x Ø240mm x 78mm (9.4"ø x 3.1")
POWER	
L	• L - 35W, 2700/3000/4000K, 2825lm
H	• H - 65W, 24V, 2700/3000/4000K, 5150lm
	• L - 35W, TW (2200-4000K)
	• H - 65W, TW (2200-4000K)
	• L - 35W, RGBW (W 4000K)
	• H - 65W, RGBW (W 4000K)
COLOR TEMP.	
27	• 27 - 2700K
30	• 30 - 3000K
40	• 40 - 4000K
T6	• T6 - Tuneable white 2200-4000K
M5	• M5 - RGBW (W 4000K)
OPTICS	
SP	• SP - Spot (15°)
MF	• MF - Flood (40°)
WD	• WD - Wide (70°)
EL	• EL - Elliptical (15°x36°)
SE	• SE - Elliptical (20°x120°)
VOLTAGE	
12	• 12 - 12VDC fixture voltage
24	• 24 - 24VDC fixture voltage
OPTIONS	
03	• 03* - Standard feed cable 3m (10')
06	• 06 - Luminaire supplied with 6m (20') feed cable
09	• 09 - Luminaire supplied with 9m (30') feed cable
15	• 15 - Luminaire supplied with 15m (50') feed cable
20	• 20 - Luminaire supplied with 20m (65') feed cable
INTERNAL LIGHT CONTROL	
4	• 4 - Half Moon

www.filixlighting-usa.com
info@filixlighting.com
Filix reserves the right to make technical changes without notice.

Arpool L

MANDATORY ACCESSORIES

Housings

HOUSING	
FAL370	• FAL370 - Concrete pool installation housing
FAL370SP	• FAL370SP - Stainless steel pool intallation housing
FAL370LN	• FAL370LN - Liner pool installation housing

Power supplies

DRIVERS	
LINK	• List of available drivers

OPTIONAL ACCESSORIES

205117	• 205117 - Socket wrench for cable gland

www.filixlighting-usa.com
info@filixlighting.com
Filix reserves the right to make technical changes without notice.

Arpool L

INSTALLATION DETAILS

Fixture

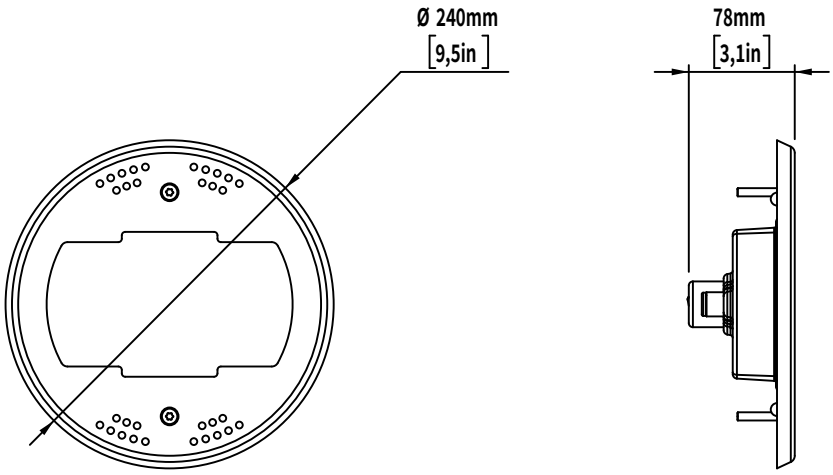

Note:
For details on specific depths, tiling thickness and other please refer to both Installation instructions for fixture and housing.

Arpool L

INSTALLATION DETAILS

Housings

FAL370 - Concrete Pool Installation

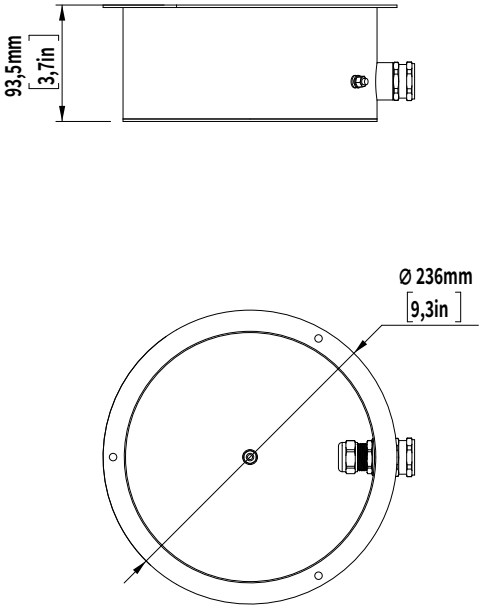

FAL370SP -Stainless Steel Pool Installation

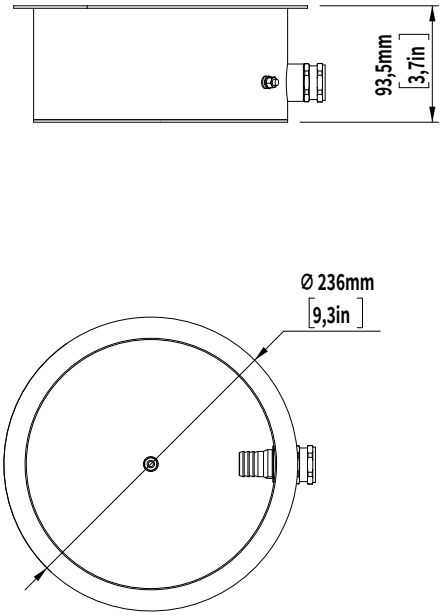

FAL370LN - Liner Pool Installation

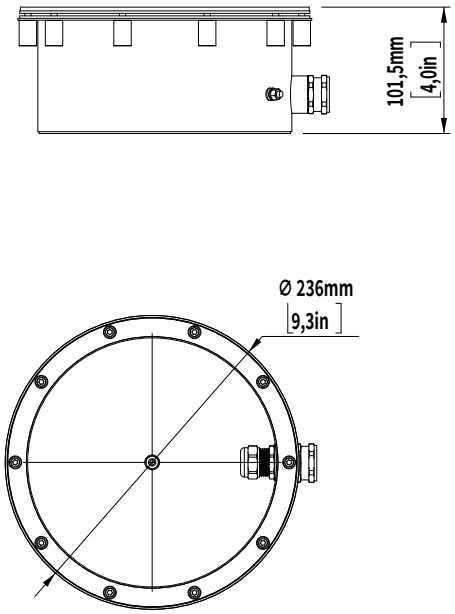

Note:
For details on specific depths, tiling thickness and other please refer to both Installation instructions for fixture and housing.

Arpool L

MANDATORY ACCESSORIES

AISI316 installation housing

Stainless steel niche used to seamlessly integrate luminaire utilizing precision press fit with no exposed hardware. The housing, chemically etched and passivated, is suitable for marine and pool environments. Standard feature include a 1.5m oil and water-resistant cable conduit, streamlining the installation process. Due to its size, the housing's back end intentionally lacks a sealed cable gland. Contractors are advised to review installation instructions for proper guidance.

Power supply

A LED power supply, is an electrical device designed to control the power supplied to an LED or an array of LEDs. It plays a critical role in LED lighting systems as LEDs demand a specific type and level of electrical current or voltage for optimal operation. It's important to note whether a constant current or constant voltage LED power supply is required. The power supply should be installed in a dry and easily accessible area.

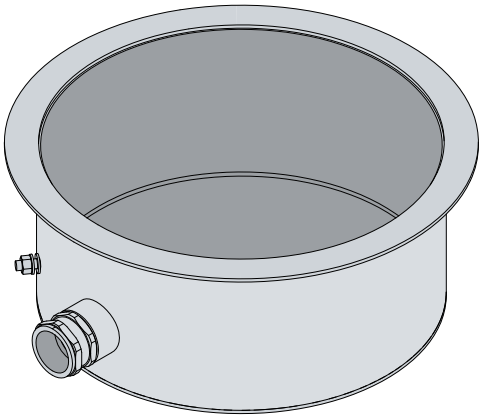

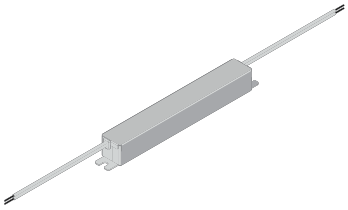

www.filixlighting-usa.com
info@filixlighting.com
Filix reserves the right to make technical changes without notice.

Arpool L

LIGHT CONTROL

Internal light control:

Half moon

Provides glare control by reducing lumen output and implementing a light beam cut-off, resulting in a 50% reduction in stray light and minimized light dispersion in undesirable directions.

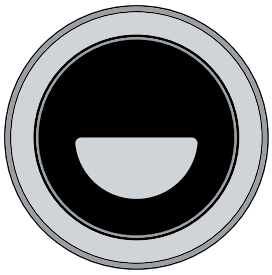

www.filixlighting-usa.com
info@filixlighting.com
Filix reserves the right to make technical changes without notice.

Arpool L

OPTICS

Spot
Angle: 15°
Delivered lumen: 2825lm

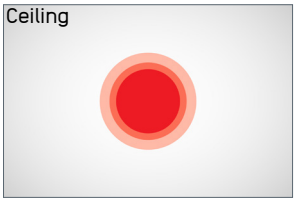

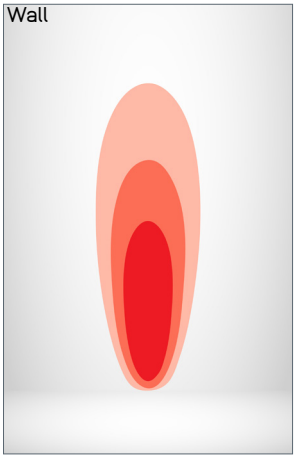

Flood
Angle: 40°
Delivered lumen: 2550lm

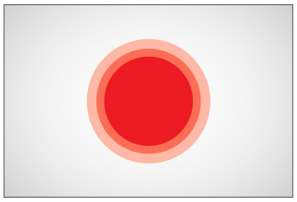

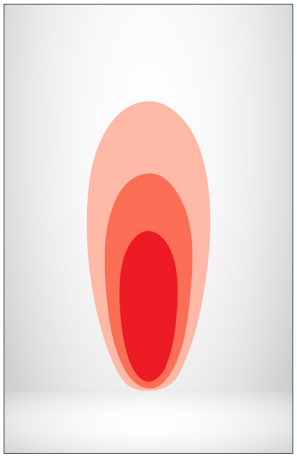

Wide
Angle: 70°
Delivered lumen: 2400lm

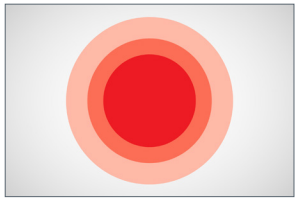

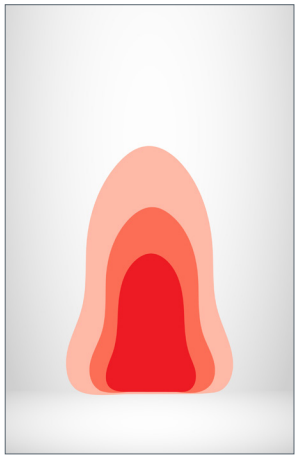

Eliptical EL
Angle: 15°x36°
Delivered lumen: 2350lm

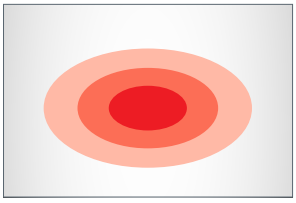

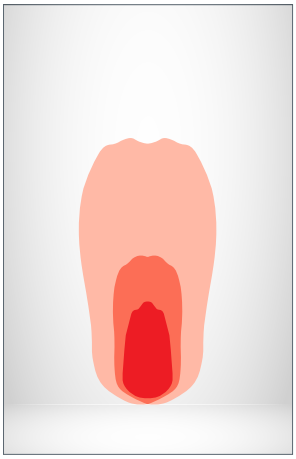

Eliptical SE
Angle: 20°x120°
Delivered lumen: 2225lm

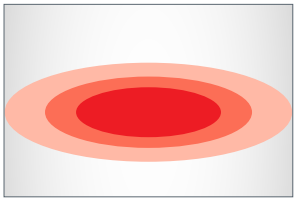

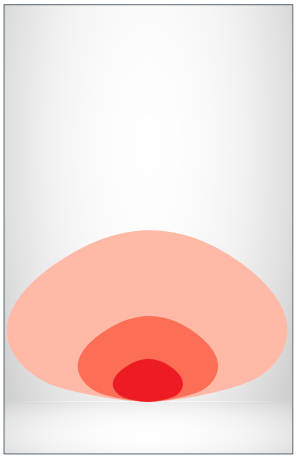

Notes

- Light output values based on 35W and 4000K product

Control

PWM SYSTEM TOPOLOGY - CONSTANT VOLTAGE

System components

- The luminaire is supplied with a factory-installed feed cable in standard lengths for connection to the PSU circuit, and mounting hardware as specified in the installation instructions.
- A remote constant voltage power supply (12V / 24V DC), DC distribution cabling between the PSU and luminaires (if required), junction boxes, connection infrastructure, and the control system (DALI, DMX, 0–10V or switching) must be provided by the installer or customer.
- Recomended components:
  - Surge protection on the AC side of the PSU
  - Appropriately sized DC cabling to limit voltage drop
  - Connectors and junction boxes suitable for the installation environment

System topology

- In the system design, any of the following system topologies can be utilized: line wiring, star wiring, or tree wiring.

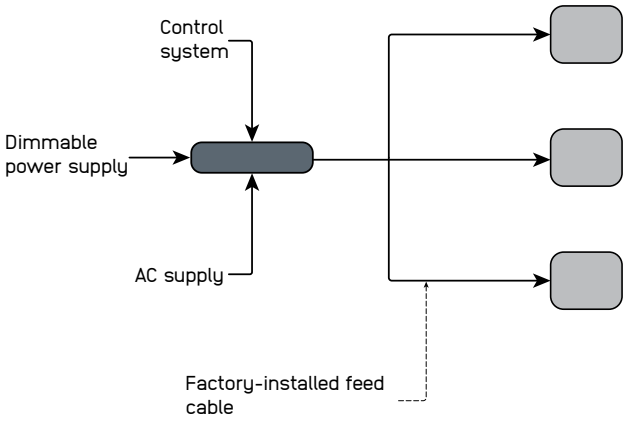

Addresing & dimming notes

- Constant voltage systems use a parallel connection topology typical for constant voltage lighting systems. Distribution layouts may include star topology, tree topology, or daisy-chain distribution.
- Individual device or channel addressing can be achieved by connecting each product to a separate output channel of the DALI or DMX dimmable power supply.
- The PSU adjusts output power according to the control signal using PWM dimming.
- Dimming options depend on the PSU and the selected control system.

Segment length and limitations

- The minimum controllable segment is one product
- Maximum cable length and number of luminaires depend on the PSU, total system wattage, conductor cross-section, and acceptable voltage drop.
- Voltage drop must remain within 10% of the nominal input voltage to ensure uniform light output.
- Dimming options depend on the PSU and the selected control system.

Fault tolerance

- Failure of the control system or communication bus does not interrupt luminaire operation if the PSU continues to supply power.
- Failure of one luminaire does not affect other luminaires connected to the same distribution line due to the parallel connection topology.
- System reliability depends on correct PSU sizing and proper electrical installation.