FILIX
FILIX LIGHTING USA INC

Arpool XM Projector

TECHNOLOGY

Heat Sense

Automatically reduces LED power at high temperatures, ensuring longevity and safety in Filix products.

Flow Sense

A built-in protector against power-related issues, ensuring lasting performance and safety.

Split & Seal

Uses protective polymers to shield Filix products from water and moisture, boosting durability and resilience.

Arpool XM Projector

Specification Sheet

IP68
ISO 9227:2017
UL STD 676 water feature/ fountaine rated
CSA C22.2#89 water feature/fountaine rated

LUMINAIRE FEATURES

Design and Application

- Medium to large-scale water features
- Sourface mounted spotlight

Mechanical details

- IK10 crystal-clear tempered glass, 10mm (0.39") thick
- IP68, rated for permanent submersion
- Maximum installation depth up to 3m (10')
- AISI316L stainless steel body
- Suitable for chlorine and marine environments
- Supplied with 3m(10') oil and water resistant feed cable as standard
- Surface mount with adjustable bracket
- Equipotential bonding point available

Electrical details

- LED Lifetime TM-21 @ 105°C L80(24K) = 145,000 hours
- Operating temperature: -20°C (-28°F) to +50°C (122°F)
- LED CRI: >85
- 3 step MacAdam
- Remote power supply
- Low voltage operation

Sustainabilty

- Recyclable material

Controls

- DMX, with compatible LED power supply
- DALI, with compatible LED power supply
- 0-10V, with compatible LED power supply
- Mains, with compatible LED power supply

Integrated systems

- Split & Seal
- Heat Sense
- Flow Sense

Links and Downloads

- List of available drivers
- Voltage drop calculator
- Fixture installation manual
- CAD files
- IES-LTD data

Note

Underwater luminaire – must be constantly submersed.

www.filixlighting-usa.com
info@filixlighting.com
Filix reserves the right to make technical changes without notice.

Arpool XM Projector

ORDERING INFORMATION

	MODEL	
●	**FAXMP**	• FAXMP - H-139mm x Ø104mm x L-98mm (H-4,5"x Ø4,1"x L-3,9")
○	**FAXMPS**	• FAXMPS - H-139mm x Ø104mm x L-135mm (H-4,5"x Ø44,1"x L-5,3")
	POWER	
○	**L**	• L - 21W, 2700/3000/4000K, 1700 lm • L - 21W, TW (2200-4000K) • L - 21W, RGBW (W 4000K)
	COLOR TEMP.	
○	**27**	• 27 - 2700K
○	**30**	• 30 - 3000K
○	**40**	• 40 - 4000K
○	**T6**	• T6 - Tuneable white 2200-4000K
○	**M5**	• M5 - RGBW (W 4000K)
	OPTICS	
○	**SP**	• SP - Spot (15°)
○	**MF**	• MF - Flood (40°)
○	**WD**	• WD - Wide (70°)
○	**SE**	• SE - Elliptical (20°x120°)
	VOLTAGE	
○	**12**	• 12 - 12VDC fixture voltage
○	**24**	• 24 - 24VDC fixture voltage
	OPTIONS	
○	**03**	• 03* - Standard feed cable 3m (10')
○	**06**	• 06 - Luminaire supplied with 6m (20') feed cable
○	**09**	• 09 - Luminaire supplied with 9m (30') feed cable
○	**15**	• 15 - Luminaire supplied with 15m (50') feed cable
○	**20**	• 20 - Luminaire supplied with 20m (65') feed cable
	INTERNAL LIGHT CONTROL	
○	**2**	• 2 - Hex Louvre
○	**4**	• 4 - Half Moon
○	**5**	• 5 - Honeymoon

www.filixlighting-usa.com
info@filixlighting.com
Filix reserves the right to make technical changes without notice.

Arpool XM Projector

MANDATORY ACCESSORIES

Power supplies

DRIVERS

LINK

- List of available drivers

Arpool XM Projector

OPTIONAL ACCESSORIES

Telescopic soft bed spike - TSBS

LENGTHS	
05	• 05 - 550mm length
15	• 15 - 1550mm length
OPTION	
S	• S - Single
D	• D - Double

Telescopic bracket - TB

LENGTHS	
03	• 03 - 300mm length
13	• 13 - 1300mm length
OPTION	
S	• S - Single
D	• D - Double

Various Accessories

VARIOUS	
WWD	• WWD - Waterproof wall duct

Arpool XM Projector

INSTALLATION DETAILS

Fixture

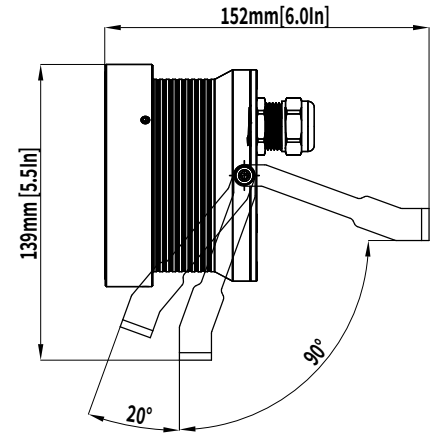

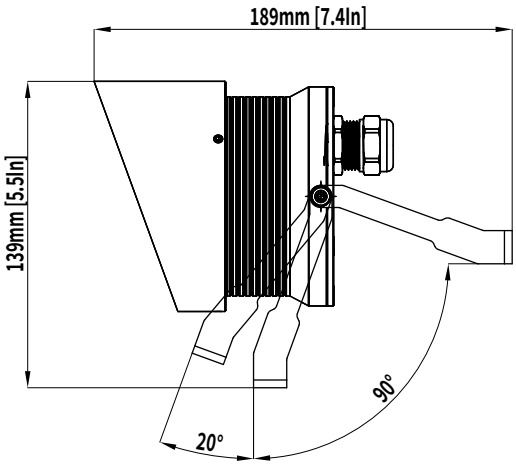

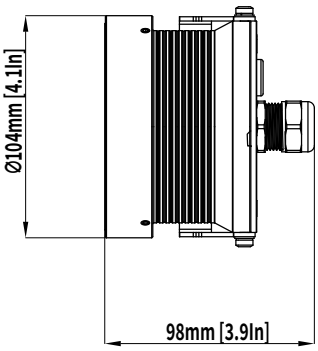

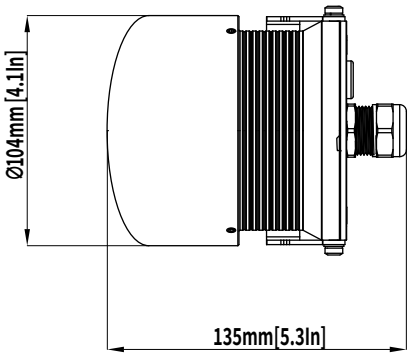

Note:
For details on specific depths, tiling thickness and other please refer to both Installation instructions for fixture and housing.

Arpool XM Projector

MANDATORY ACCESSORIES

Power supply

A LED power supply, is an electrical device designed to control the power supplied to an LED or an array of LEDs. It plays a critical role in LED lighting systems as LEDs demand a specific type and level of electrical current or voltage for optimal operation. It's important to note whether a constant current or constant voltage LED power supply is required. The power supply should be installed in a dry and easily accessible area.

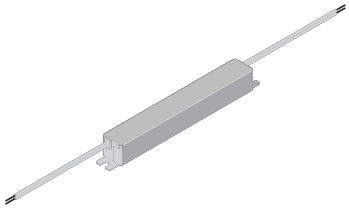

Arpool XM Projector

ACCESSORIES

Waterproof wall duct

Ensures a secure, watertight transition between the water body and the concrete shell, with adjustable features to accommodate different wall thicknesses.

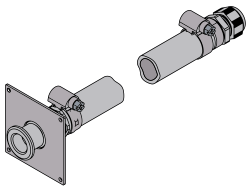

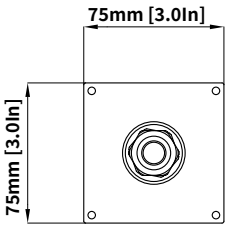

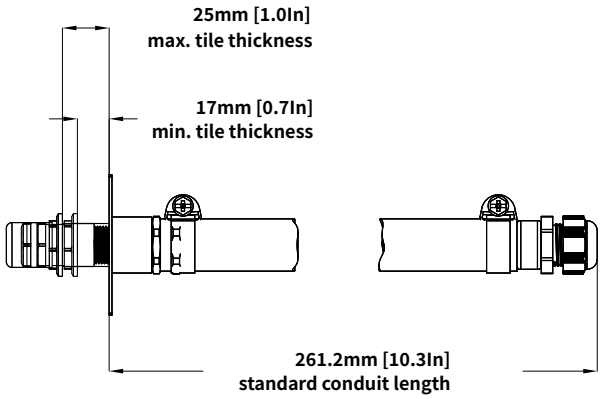

Telescopic soft bed spike

The Filix telescopic soft bed spike, offered in both 550mm and 1550mm lengths, ensures stable ground support for outdoor lighting installations in soft ground beds. It is suitable for mounting up to 2 projectors.

Telescopic bracket

Telescopic bBracket, offered in both 300mm and 1300mm heights, provides secure and adjustable support for outdoor lighting installations. It is suitable for mounting up to two projectors.

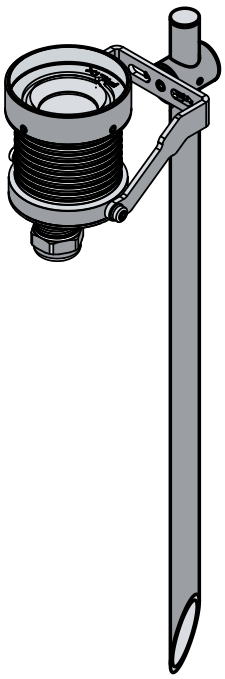

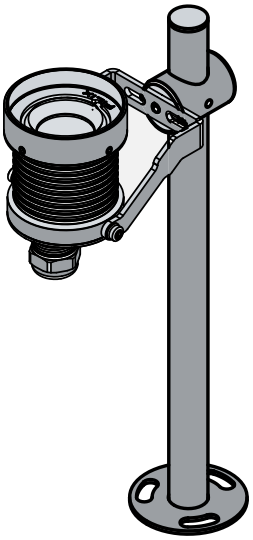

Arpool XM Projector

LIGHT CONTROL

Internal light control:

Hex louvre

Provides low glare control with 45% less lumen output than product without louvres. Best for use when there is no need for segment beam cut off such as in half moon.

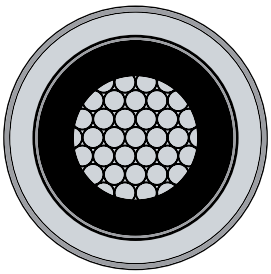

Half moon

Provides glare control by reducing lumen output and implementing a light beam cut-off, resulting in a 50% reduction in stray light and minimized light dispersion in undesirable directions.

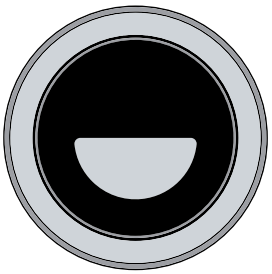

Honeymoon

Combines the benefits of Hex Louvre and Halfmoon, offering both reduced glare and controlled light dispersion for comprehensive glare management.

Arpool XM Projector

OPTICS

Spot
Angle: 15°
Delivered lumen: 1750lm

Flood
Angle: 40°
Delivered lumen: 1600lm

Wide
Angle: 70°
Delivered lumen: 1300lm

Eliptical
Angle: 20°x120°
Delivered lumen: 1200lm

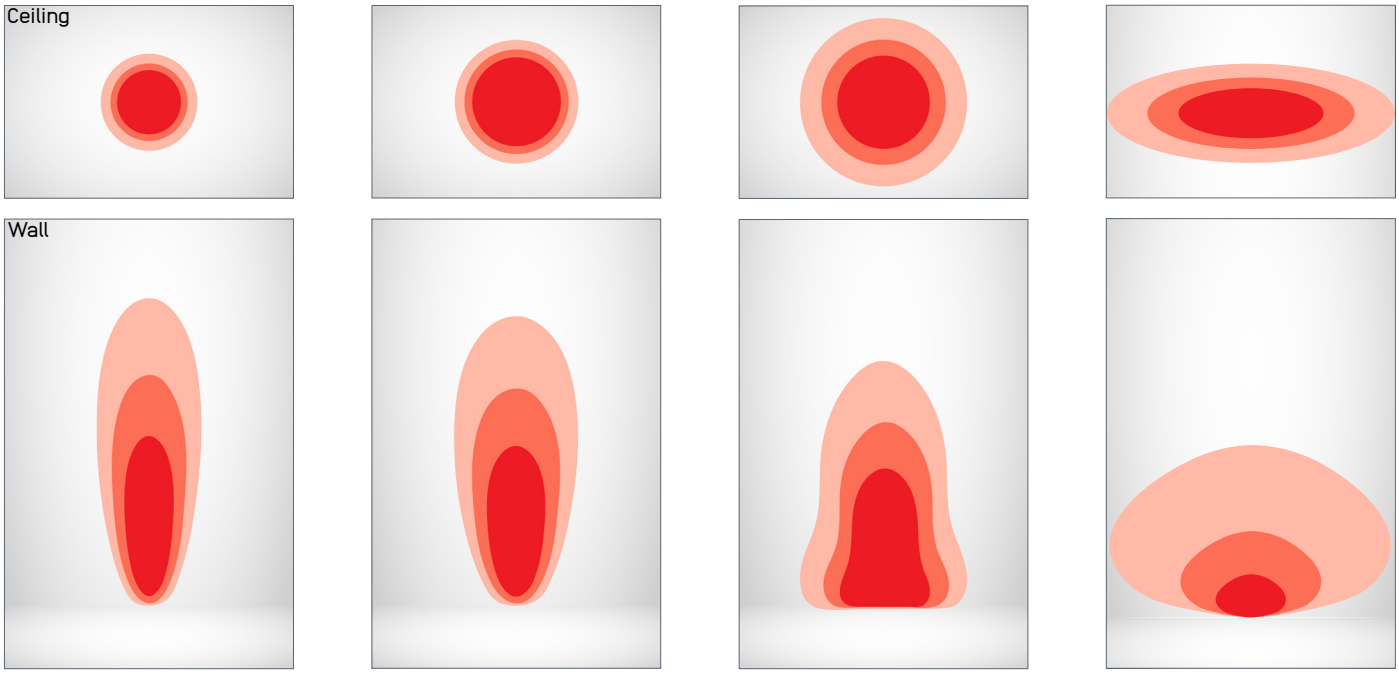

Notes

- Light output values based on 21W and 4000K product

www.filixlighting-usa.com
info@filixlighting.com
Filix reserves the right to make technical changes without notice.

Control

PWM SYSTEM TOPOLOGY - CONSTANT VOLTAGE

System components

- The luminaire is supplied with a factory-installed feed cable in standard lengths for connection to the PSU circuit, and mounting hardware as specified in the installation instructions.
- A remote constant voltage power supply (12V / 24V DC), DC distribution cabling between the PSU and luminaires (if required), junction boxes, connection infrastructure, and the control system (DALI, DMX, 0–10V or switching) must be provided by the installer or customer.
- Recomended components:
  - Surge protection on the AC side of the PSU
  - Appropriately sized DC cabling to limit voltage drop
  - Connectors and junction boxes suitable for the installation environment

System topology

- In the system design, any of the following system topologies can be utilized: line wiring, star wiring, or tree wiring.

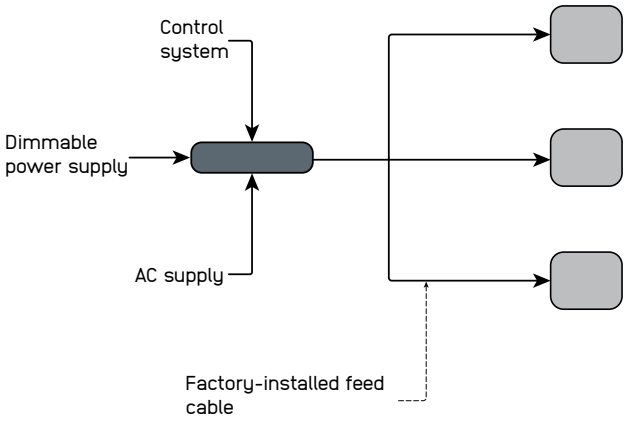

Addresing & dimming notes

- Constant voltage systems use a parallel connection topology typical for constant voltage lighting systems. Distribution layouts may include star topology, tree topology, or daisy-chain distribution.
- Individual device or channel addressing can be achieved by connecting each product to a separate output channel of the DALI or DMX dimmable power supply.
- The PSU adjusts output power according to the control signal using PWM dimming.
- Dimming options depend on the PSU and the selected control system.

Segment length and limitations

- The minimum controllable segment is one product
- Maximum cable length and number of luminaires depend on the PSU, total system wattage, conductor cross-section, and acceptable voltage drop.
- Voltage drop must remain within 10% of the nominal input voltage to ensure uniform light output.
- Dimming options depend on the PSU and the selected control system.

Fault tolerance

- Failure of the control system or communication bus does not interrupt luminaire operation if the PSU continues to supply power.
- Failure of one luminaire does not affect other luminaires connected to the same distribution line due to the parallel connection topology.
- System reliability depends on correct PSU sizing and proper electrical installation.