FILIX
FILIX LIGHTING USA INC

Faro Round 100

TECHNOLOGY

Flow Sense
A built-in protector against power-related issues, ensuring lasting performance and safety.

Split & Seal
Uses protective polymers to shield Filix products from water and moisture, boosting durability and resilience.

Heat Sense
Automatically reduces LED power at high temperatures, ensuring longevity and safety in Filix products.

ASHRAE/IEC 90.1 Compliant
Defines energy efficiency standards for building design, focusing on insulation, HVAC, and sustainable energy use.

Qualicoat Seaside Class Powder Coat
Enhanced powder coating for aluminum, specifically formulated for superior durability and optimal performance in marine environments, lasting for over 10 years.

Faro Round 100

Specification Sheet

ETL Intertek (Pending)
IP66/IP67

LUMINAIRE FEATURES

Design and Application

- Round outdoor projector
- For medium to large-scale facades and structures

Mechanical details

- IK08 crystal-clear tempered glass, 4 mm (0.15") thick
- IP66 protected against powerful water jets
- IP67, rated for temperary submersion (30min) in water up to 1m
- 3G vibration rating resistance (ANSI C136.32)
- Die-Cast aluminium body
- Double surface protected with anodised base layer and powder coat top layer in Qualicoat Seaside standard
- Surface Installation
- Supplied with 0.5 m (1.64') oil and water resistant feed cable as standard

Electrical details

- LED Lifetime TM-21 @ 105°C
  L80(24K) = 145,000 hours
- Operating temperature -40°C (-40°F) to +50°C (122°F)
- CRI >85
- 3 step MacAdam
- Integral or remote power supply
- Class I with integral power supply, Class III with remote power supply

Controls

- DMX, Integral or with compatible LED power supply,
- DALI, Integral or with compatible LED power supply,
- 0-10V, Integral or with compatible LED power supply,
- Mains, with compatible LED power supply

Sustainability

- Recyclable material
- Repairable
- Dark Sky compliant

Integrated Systems

- Split & Seal
- Heat Sense
- Flow Sense

Links & Downloads

- List of available drivers
- Voltage drop calculator
- Fixture installation manual
- CAD files
- IES-LTD data

Faro Round 100

ORDERING INFORMATION

MODEL	
FFR10	
POWER	
L	• L - 20W, 2000 lm
H	• H - 30W, 3000 lm
COLOR TEMP.	
AM	• AM - Amber
27	• 27 - 2700K
30	• 30 - 3000K
T6	• T6 - Tuneable white 2200K-4000K
M4	• M4 - RGBW (W 3000K)
OPTICS	
SP	• SP - Narrow Spot (8X8°)
MS	• MS - Medium Spot (15X15°)
NF	• NF - Narrow Flood (30x30°)
MF	• MF - Medium Flood (40x40°)
W	• W - Wide (60x60°)
SY	• SY - Spot Elliptical (10°x20°)
NY	• NY - Narrow Elliptical (10°x40°)
MY	• MY - Medium Elliptical (10°x60°).
DA	• DA - Digitally Adjustable (DMX only)
INPUT OPTIONS	
CC	• CC - Constant current
24	• 24 - 24VDC
110	• 110 - 110-277VAC, 60Hz
230	• 230 - 220-240VAC, 50Hz
CONTROL	
0	• 0 - ON-OFF operation
X	• X - DMX Operation
D	• D - DALI Operation
V	• V - 0-10V operation
P	• P - PWM operation (Low voltage only)

FINISH	
W	• W - RAL9003 Structure (Signal White)
S	• S - RAL7044 Structure (Silky Grey)
A	• A - RAL7016 Structure (Antracite Grey)
B	• B - RAL9005 Structure (Jet Black)
D	• D - RAL 1015 Structure (Desert Sand)
G	• G - RAL 6002 Structure (Leaf Green)
INTERNAL LIGHT CONTROL	
0	• 0 - No internal light control
1	• 1 - Microlouvre
2	• 2 - Hex louvre
3	• 3 - Discrete sight
4	• 4 - Half moon
5	• 5 - Honeymoon
6	• 6 - Silhouetteform
EXTERNAL LIGHT CONTROL	
0	• 0 - No external light control
1	• 1 - Snoot
INSTALLATION TYPE	
B	• B - Base
E	• E - Spike
F	• F -Tree Strap
G	• G - Pole Base
CABLE LENGTH OPTIONS	
00	• 0.5 - standard feed cable 0.5m (1,6')

Faro Round 100

MANDATORY ACCESSORIES

Power supplies

DRIVERS
LINK

- List of available drivers

OPTIONAL ACCESSORIES

Various Accessories

VARIOUS
203953

- 203953 - Safety wire rope

Faro Round 100

INSTALLATION DETAILS

Fixture

Die-cast aluminium projector for façade, architectural, landscape, and accent lighting, built for harsh outdoor use with IK08 tempered glass and IP66/IP67 protection. Double-protected finish (anodised base + Qualicoat Seaside powder coat) and a 0.5 m oil- and water-resistant feed cable are standard, with integrated Flow Sense, Heat Sense, Split & Seal, and power protection for long-term reliability. DMX/DALI/0–10V/mains control is supported with a compatible LED power supply.

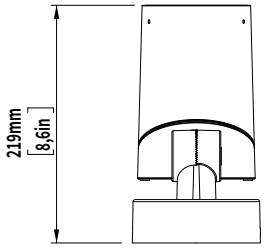

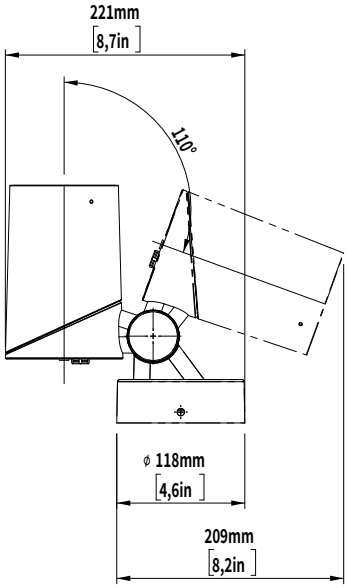

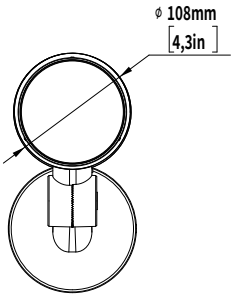

Spike installation

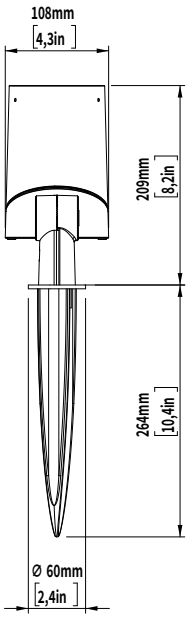

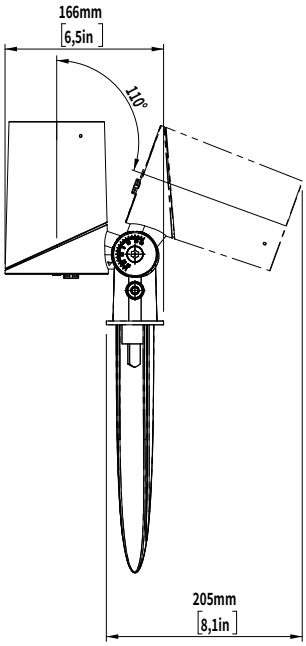

Tree strap/pole installation

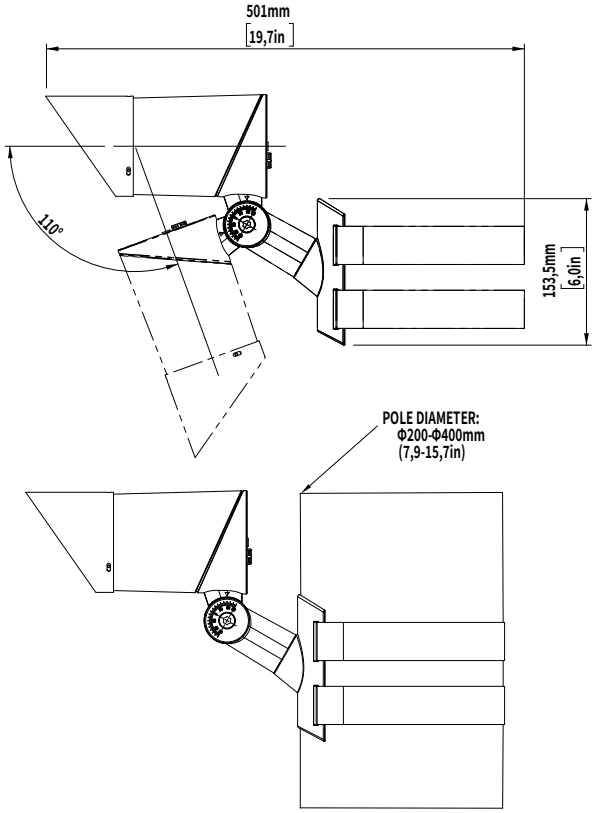

Faro Round 100

INTERNAL LIGHT CONTROL

Microlouvre

Provides low glare control with 30% lesslumen output than product without louvres.best for use where pedestrians are at least6m (20ft) from the light source

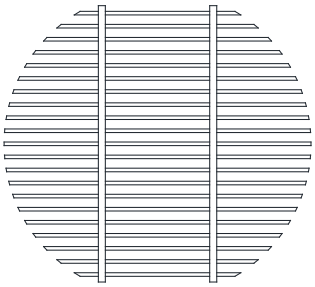

Hex louvre

Provides low glare control with 45% less lumen output than product without louvres. Best for use when there is no need for segment beam cut off such as in half moon

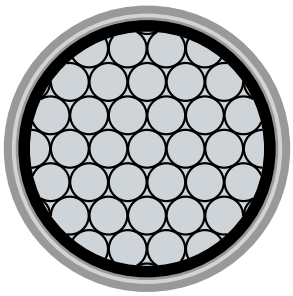

Discrete sight

Provides low glare control with 60% less lumenoutput than product without louvres. best foruse in high trafic areas where pedestirans areat least 0,5m (1,64ft) away from the source

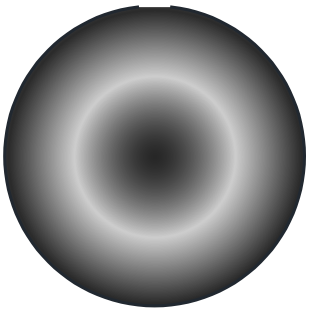

Halfmoon

Provides glare control by reducing lumen output and implementing a light beam cut-off, resulting in a 50% reduction in stray light and minimized light dispersion in undesirable directions.

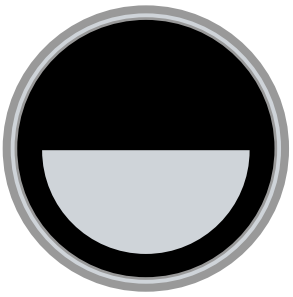

Honeymoon

Combines the benefits of Hex Louvre and Halfmoon, offering both reduced glare and controlled light dispersion for comprehensive glare management.

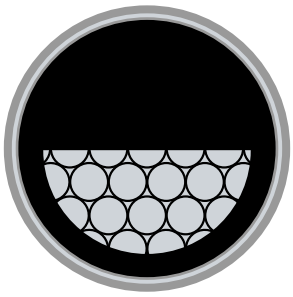

Silhouetteform

An optical accessory designed to produce a soft, blurred silhouette on the target surface. Ideal for ambient effects, the insert diffuses the beam into abstract or naturalistic shapes without hard edges.

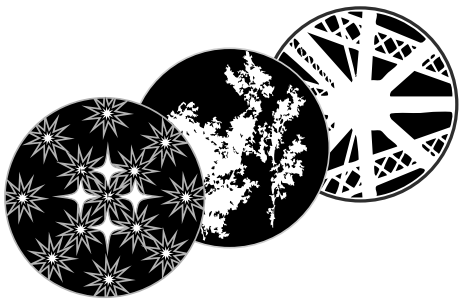

Faro Round 100

EXTERNAL LIGHT CONTROL

Snoot

External attachment providing enhanced glare control, effectively shielding the light source to reduce direct glare and prevent light spill in unwanted directions.

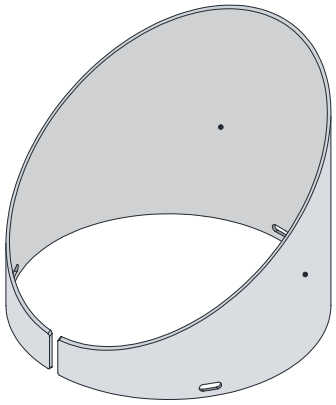

Faro Round 100

OPTIONAL ACCESSORIES

Power supply

A LED power supply, is an electrical device designed to control the power supplied to an LED or an array of LEDs. It plays a critical role in LED lighting systems as LEDs demand a specific type and level of electrical current or voltage for optimal operation. It's important to note whether a constant current or constant voltage LED power supply is required. The power supply should be installed in a dry and easily accessible area.

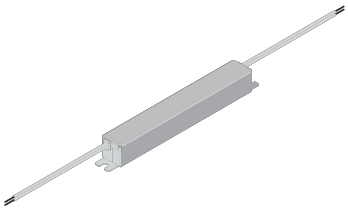

Safety wire rope

300mm long safety bond for added security during high-altitude installations

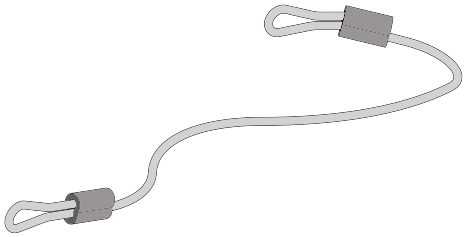

Filix reserves the right to make technical changes without notice.

Faro Round 100

INSTALLATION OPTIONS

Base installation

Securely mounts the projector on a stable base, integrating wiring for a clean and permanent setup, ideal for environments requiring stable installations.

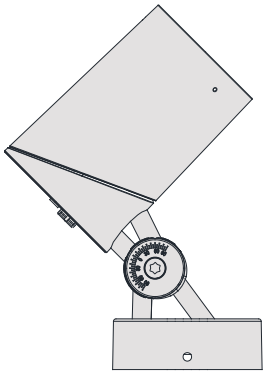

Spike installation

Ground spike-based setup allows easy insertion into the soil, perfect for flexible outdoor applications and landscape lighting.

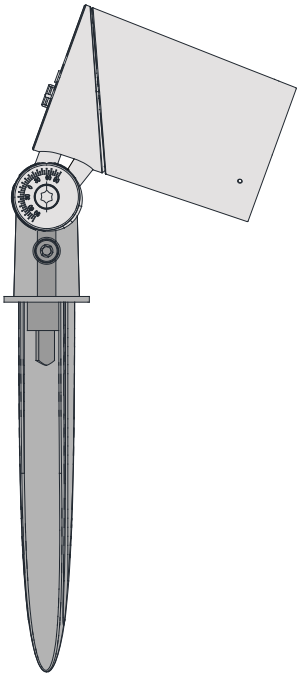

Tree strap installation

Adjustable metal strap secures the projector to a tree or branch, providing a versatile, non-invasive installation for natural settings.

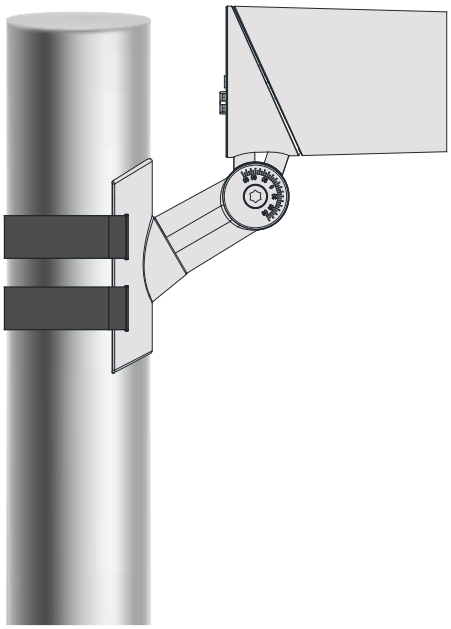

Pole base installation

Attaches the projector to a pole with an integrated wiring base, suitable for elevated, stable installations like street lighting.

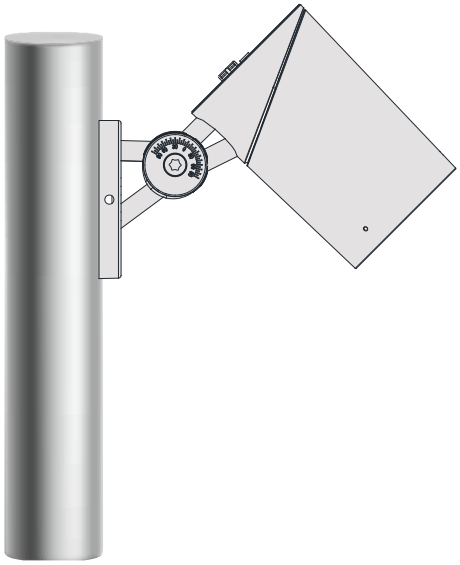

Faro Round 100

OPTICS

Narrow Spot
Angle: 8°x8°
Delivered lumen: 3000lm

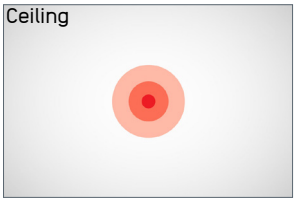

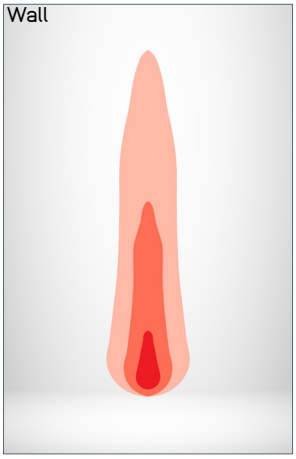

Medium Spot
Angle: 15°x15°
Delivered lumen: 2500lm

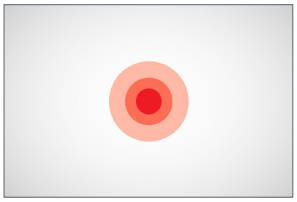

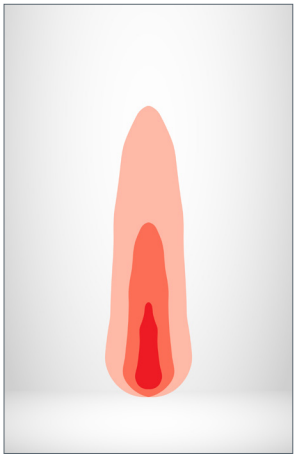

Narrow Flood
Angle: 30°x30°
Delivered lumen: 2300lm

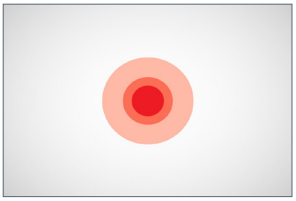

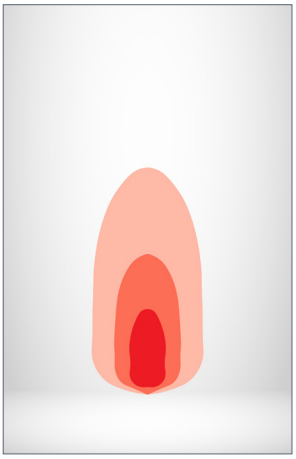

Medium Flood
Angle: 40°x40°
Deliverd lumen: 2225lm

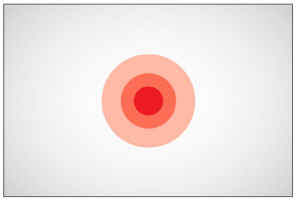

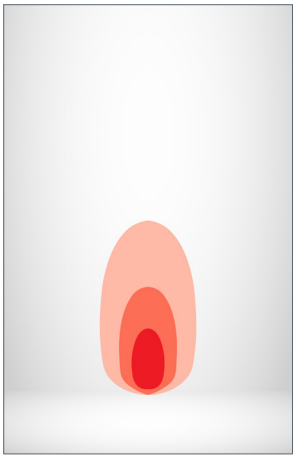

Wide
Angle: 60°x60°
Delivered lumen: 2150lm

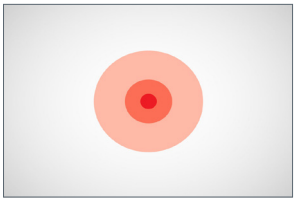

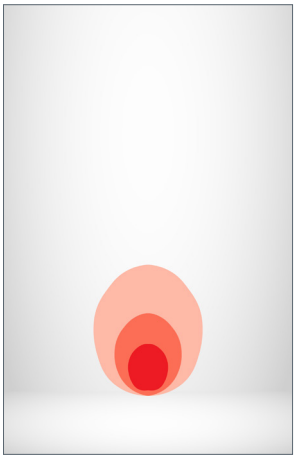

Spot Asymmetric
Angle: 10°x20°
Delivered lumen: 2380lm

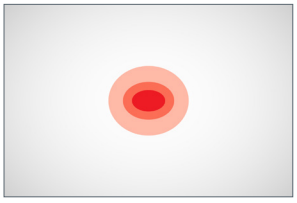

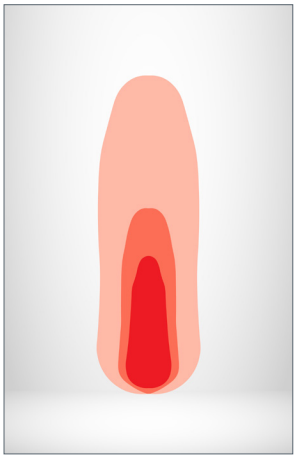

Narrow Asymmetric
Angle: 10°x40°
Delivered lumen: 2270lm

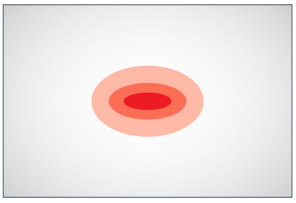

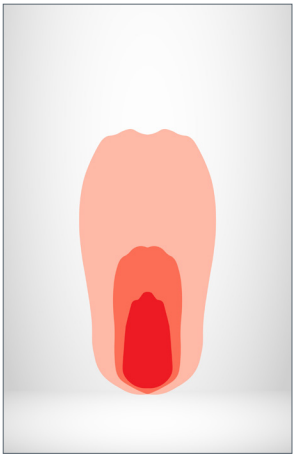

Medium Asymmetric
Angle: 10°x60°
Delivered lumen: 2215lm

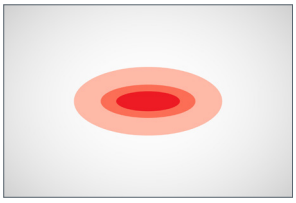

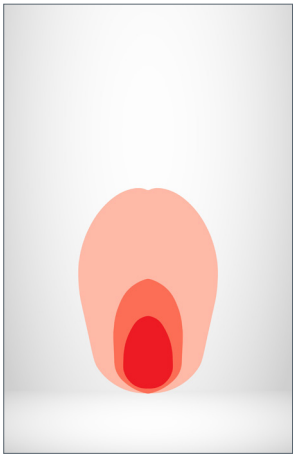

- Light output values based on 30W, 3000K, CC product

www.filixlighting.com
info@filixlighting.com
Filix reserves the right to make technical changes without notice.

Faro Round 100

DIGITALY ADJUSTABLE OPTICS

Digitaly adjustable beam angels

10° x 10° 40° x 40° 60° x 60°

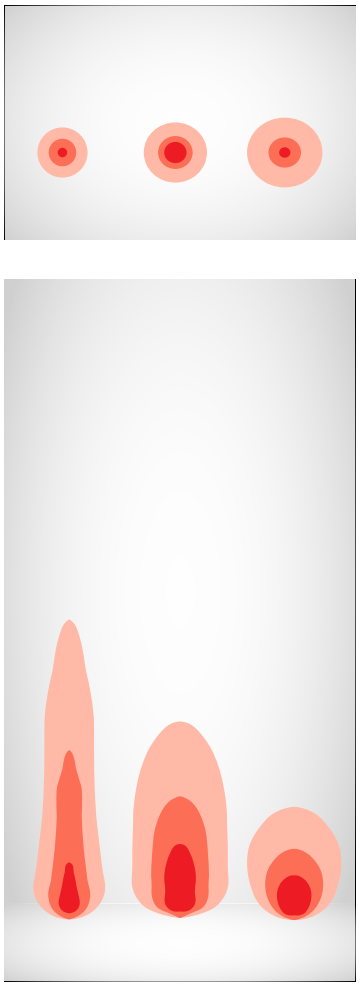

10° x 20° 10° x 40° 10° x 60°

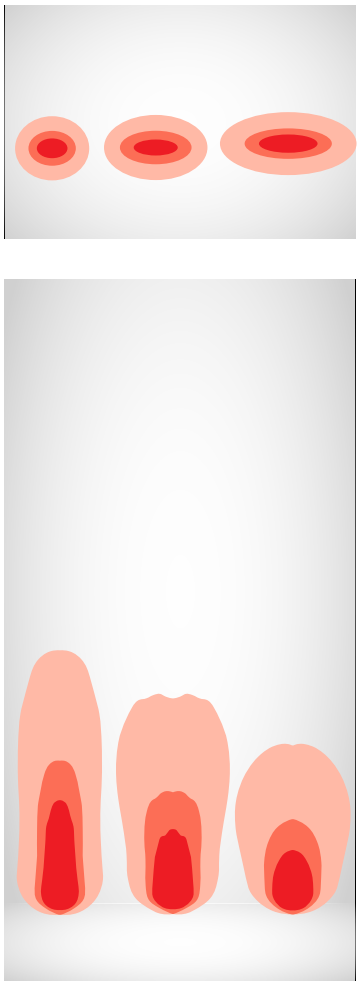

20° x 10° 40° x 10° 60° x 10°

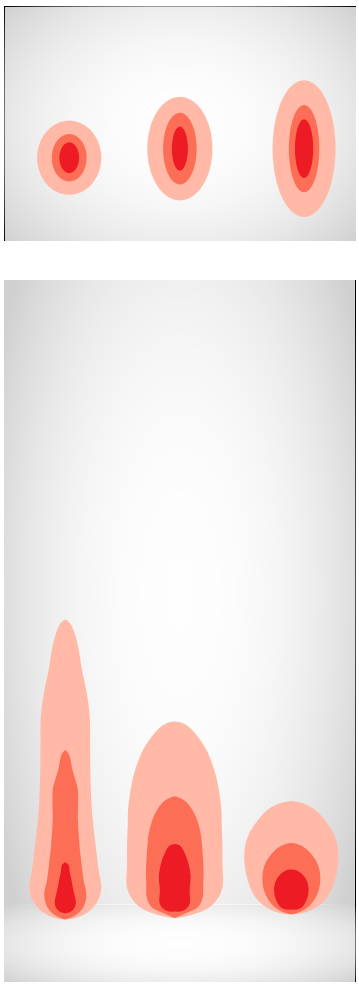

This optical solution enables dynamic adjustment of the beam angle without mechanical movement. It provides the flexibility to switch between focused and wide light distributions in real time, making it ideal for adaptive lighting setups and scenes that require shifting emphasis or coverage

Filix reserves the right to make technical changes without notice.

Control

PWM SYSTEM TOPOLOGY - CONSTANT VOLTAGE

System components

- The luminaire is supplied with a factory-installed feed cable in standard lengths for connection to the PSU circuit, and mounting hardware as specified in the installation instructions
- A remote constant voltage power supply (12V / 24V DC), DC distribution cabling between the PSU and luminaires (if required), junction boxes, connection infrastructure, and the control system (DALI, DMX, 0–10V or switching) must be provided by the installer or customer
- Recomended components:
  - Surge protection on the AC side of the PSU
  - Appropriately sized DC cabling to limit voltage drop
  - Connectors and junction boxes suitable for the installation environment

System topology

- In the system design, any of the following system topologies can be utilized: line wiring, star wiring, or tree wiring

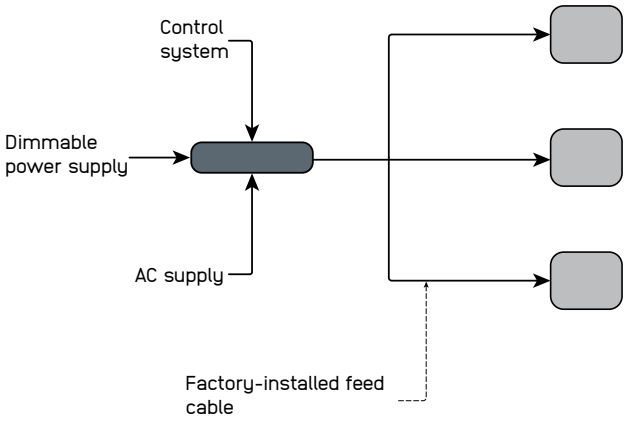

Addresing & dimming notes

- Constant voltage systems use a parallel connection topology typical for constant voltage lighting systems. Distribution layouts may include star topology, tree topology, or daisy-chain distribution
- Individual device or channel addressing can be achieved by connecting each product to a separate output channel of the DALI or DMX dimmable power supply.
- The PSU adjusts output power according to the control signal using PWM dimming
- Dimming options depend on the PSU and the selected control system

Segment length and limitations

- The minimum controllable segment is one product
- Maximum cable length and number of luminaires depend on the PSU, total system wattage, conductor cross-section, and acceptable voltage drop
- Voltage drop must remain within 10% of the nominal input voltage to ensure uniform light output
- Dimming options depend on the PSU and the selected control system

Fault tolerance

- Failure of the control system or communication bus does not interrupt luminaire operation if the PSU continues to supply power
- Failure of one luminaire does not affect other luminaires connected to the same distribution line due to the parallel connection topology
- System reliability depends on correct PSU sizing and proper electrical installation

Control

SYSTEM TOPOLOGY - CONSTANT CURRENT

System components

- The luminaire is supplied with a factory-installed feed cable in standard lengths for connection to the PSU circuit, and mounting hardware as specified in the installation instructions
- A compatible constant current LED driver, series connection cabling between the driver and luminaires, junction boxes, connection infrastructure, and the control system (DALI, DMX, 0–10V or switching) must be provided by the installer or customer
- Recomended components:
  - Surge protection on the AC side of the driver
  - Connectors and junction boxes suitable for the installation environment
  - Drivers with compatible dimming interfaces required by the project

System topology

- Constant current systems use a series connection topology where luminaires are connected sequentially within a single driver circuit

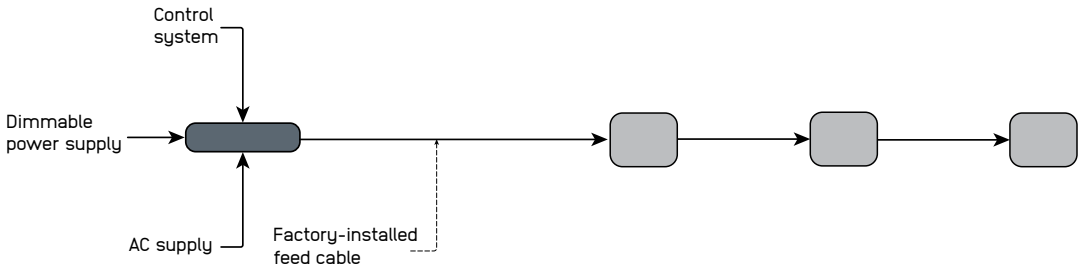

Addresing & dimming notes

- Individual device or channel addressing can be achieved by connecting each product to a separate output channel of the DALI or DMX compatible driver
- The PSU adjusts output current according to the control signal
- Dimming options depend on the PSU and the selected control system

Segment length and limitations

- The minimum controllable segment is one product
- Maximum number of luminaires depends on the driver output current and total forward voltage of the connected luminaires
- The total forward voltage must remain within the driver operating range

Fault tolerance

- Failure of the control system or communication bus does not interrupt luminaire operation if the driver continues to supply current
- Failure of one luminaire may interrupt operation of the entire circuit due to the series connection topology
- System reliability depends on correct driver selection and proper electrical installation

Control

0-10V SYSTEM TOPOLOGY

System components

- The 0-10V system, wiring, protective devices and junction boxes leading up to feed cable at the start of the line are the responsibility of others
- Feed cables and neccessarry accessories that are marked as mandatory must to be ordered separately
- For optional branching of the system Power & Data Splitter must be used
- Advised protective components:
  - Surge protector device
  - Inrush current limiter

System topology

- In the system design, any of the following system topologies can be utilized: line wiring, star wiring, or tree wiring

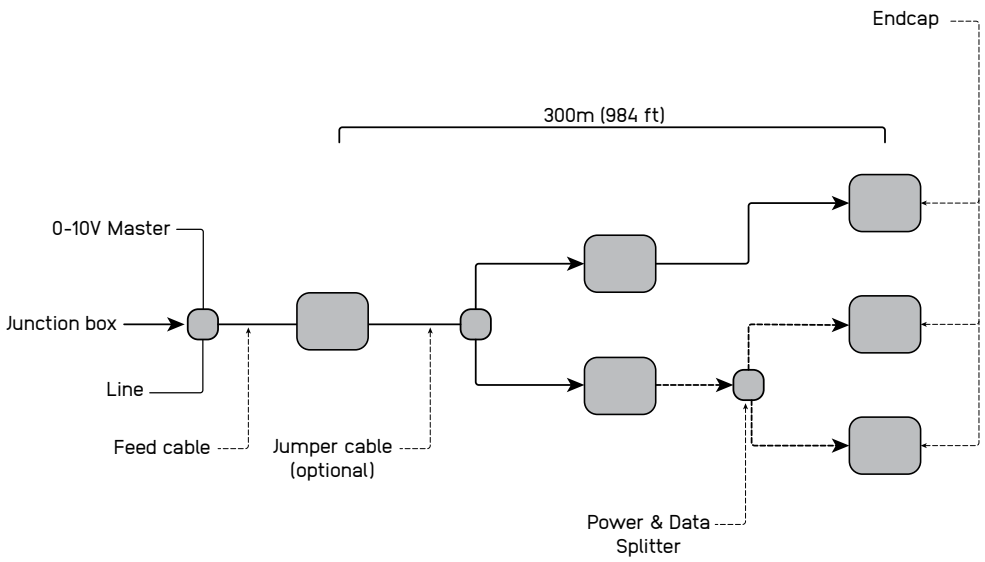

Addressing & dimming notes

- 0-10V protocol does not allow addressing devices individually
- Logharitmic and linear dimming options avaliable. The product is initially equipped with logarithmic dimming settings and it is suggested for the controlers to be linear in order to get the dimming that is most preffered in most cases due to the dimming curve percieved by human eye
- 0%-100% dimming range
- The product is initally set up as a source instead of as a sink type
- The product could also be set up as a sink type but this should be noted to sales represenative

Segment length and limitations

- The minimum segment length is 30cm [1ft]
- The minimum segment length is equalt to one product
- The maximum distance between two fittings is 30 meters, and the maximum distance between the first and last fitting is 300 meters.
- Used in signle colour applications

Fault tolerance

- If the product is source type and in the case the control line doesn't have power the light fitting will turn at 100%. in the opposite case where the light is sink type, light will not work
- If one product fails the rest of the system continues to work
- Class I wiring implemented in the fixture and voltage flxtuation filter implemented

Control

DALI SYSTEM TOPOLOGY

System components

- The DALI system, wiring, protective devices and junction boxes leading up to feed cable at the start of the line are the responsibility of others
- Feed cables and neccessarry accessories that are marked as mandatory must to be ordered separately
- For optional branching of the system Power & Data Splitter must be used
- Advised protective components:
  - Surge protector device
  - Inrush current limiter

System topology

- In the system design, any of the following system topologies can be utilized: line wiring, star wiring, or tree wiring

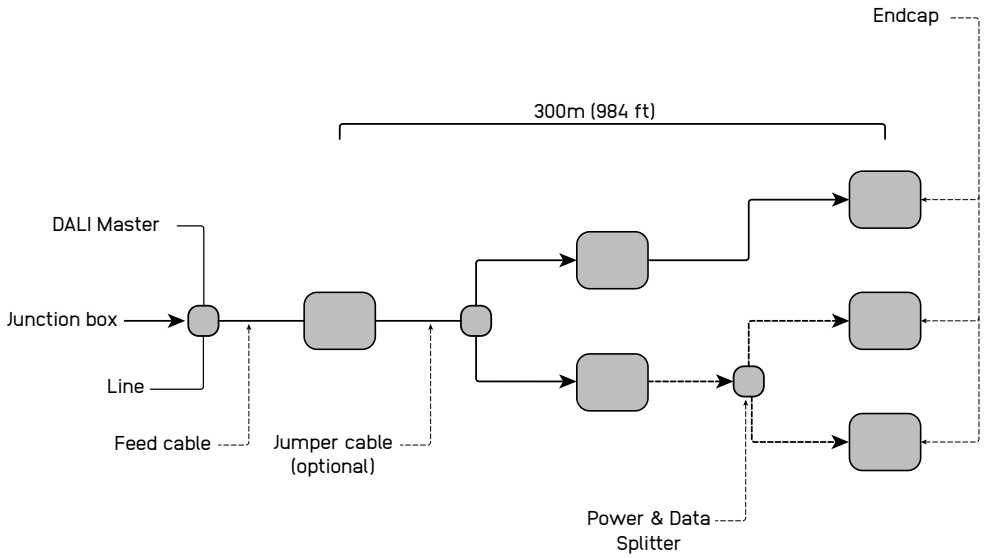

Addressing & dimming notes

- DALI protocol allows addressing devices individually
- Addressing methods include a short address for individual devices, group addresses for up to 16 groups, and a broadcast address that targets everything on the line
- Logharitmic and linear dimming options avaliable. the product is initially equipped with logarithmic dimming settings, while you can easily switch to logarithmic dimming using a configuration device
- 0%-100% dimming range

Segment length and limitations

- The minimum segment length is equal to one product
- A DALI master has the capacity to manage a line containing a maximum of 64 devices. Each device can be allocated to 16 unique groups and 16 individual scenes
- The maximum distance between two fittings is 30 meters [98ft] , and the maximum distance between the first and last fitting is 300m [984ft).
- Used in single colour and tunable white applications

Fault tolerance

- Due to its relatively slow operating speed and high bus voltage, the DALI system exhibits significant reliability in the presence of electrical interference, making shielding unnecessary
- If one product fails the rest of the system continues to work

Control

DMX SYSTEM TOPOLOGY

System components

- The DMX system, wiring, protective devices and junction boxes leading up to the first product at the start of the line are the responsibility of others
- Feed cables and neccessarry accessories are mandatory and must to be ordered separately
- For optional branching of the system, a DMX splitter must be used
- Advised protective components:
  - Surge protection device
  - Inrush current limiter

System topology

- In the system design, only line (daisy chain) wirinig can be used

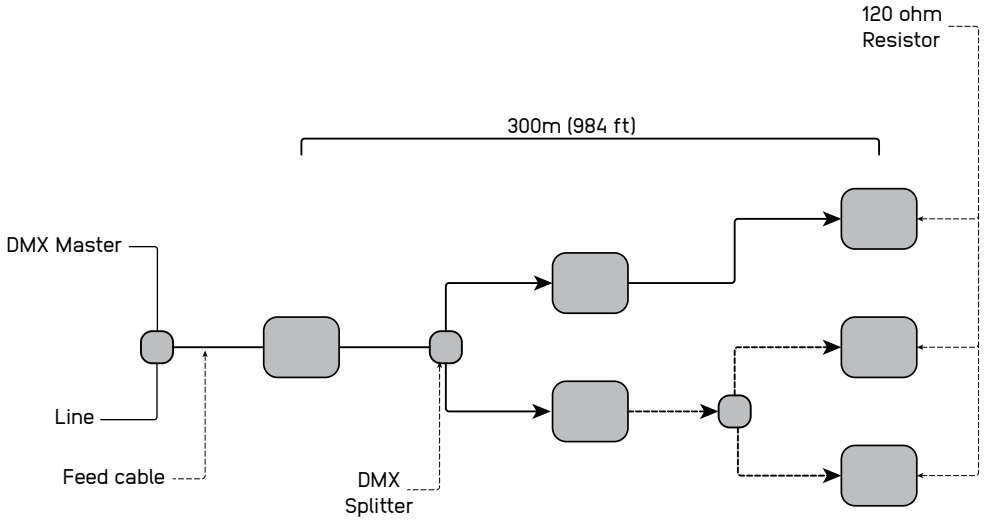

- DMX controller (DMX Master) Is connected to the first product in the line via feed cable
- Optional branching is allowed only via DMX splitter (no T-branches)
- End-of-line termination is required at the last device in the line according to DMX installation practice

Addressing & dimming notes

- DMX protocol allows individual device addressing
- Devices can be factory-addressed or configured on site
- Products are supplied with logarithmic dimming as default
- 0%-100% dimming range
- Suitable for single colour, tunable white and RGBW applications

Segment length and limitations

- Maximum communication distance depends on cable type, topology and installation conditions
- DMX installation must follow standard DMX512 wiring practice
- One DMX universe supports a maximum of 512 control channels

Fault tolerance

- The DMX system provides high reliability against electrical interference when installed according to DMX wiring practice
- If a single product experiences an internal failure, the remaining system may continue operating provided the DMX communication line remains electrically intact