FILIX

Faro Round 35

TECHNOLOGY

Flow Sense

A built-in protector against power-related issues, ensuring lasting performance and safety.

Split & Seal

Uses protective polymers to shield Filix products from water and moisture, boosting durability and resilience.

Heat Sense

Automatically reduces LED power at high temperatures, ensuring longevity and safety in Filix products.

ASHRAE/IEC 90.1 Compliant

Defines energy efficiency standards for building design, focusing on insulation, HVAC, and sustainable energy use.

Qualicoat Seaside Class Powder Coat

Enhanced powder coating for aluminum, specifically formulated for superior durability and optimal performance in marine environments, lasting for over 10 years.

Faro Round 35

Specification Sheet

ETL Intertek (Pending)
IP66/IP67

LUMINAIRE FEATURES

Design and Application

- Round outdoor projector
- For small-scale facades, trees and accent lighting

Mechanical details

- IK08 crystal-clear tempered glass, 4 mm (0.15") thick
- IP66 protected against powerful water jets
- IP67, rated for temperary submersion (30min) in water up to 1m
- 3G vibration rating resistance (ANSI C136.32)
- Die-Cast aluminium body
- Double surface protected with anodised base layer and powder coat top layer in Qualicoat Seaside standard
- Surface Installation
- Supplied with 0.5 m (1.64') oil and water resistant feed cable as standard

Electrical details

- LED Lifetime TM-21 @ 105°C
  L80(24K) = 145,000 hours
- Operating temperature -40°C (-40°F) to +50°C (122°F)
- CRI >85
- 3 step MacAdam
- Remote power supply
- Low voltage operation
- Class III product

Controls

- DALI, with compatible LED power supply,
- 0-10V, with compatible LED power supply,
- Mains, with compatible LED power supply

Sustainability

- Recyclable material
- Repairable
- Dark Sky compliant

Integrated Systems

- Split & Seal
- Heat Sense
- Flow Sense

Links & Downloads

- List of available drivers
- Voltage drop calculator
- Fixture installation manual
- CAD files
- IES-LTD data

Faro Round 35

ORDERING INFORMATION

	MODEL	
●	FR03	
	POWER	
○	L	• L - 3W, Amber/2700/300, 300 lm
○	H	• H - 6W, Amber/2700/300, 600 lm
		• H - 6W, TW (2200-4000K)
	COLOR TEMP.	
○	AM	• AM - Amber
○	27	• 27 - 2700K
○	30	• 30 - 3000K
○	T6	• T6 - Tuneable white 2200K-4000K
	OPTICS	
○	SP	• SP - Narrow Spot (8X8°)
○	MS	• MS - Medium Spot (15X15°)
○	NF	• NF - Narrow Flood (30x30°)
○	MF	• MF - Medium Flood (40x40°)
○	W	• W - Wide (60x60°)
○	SY	• SY - Spot Elliptical (10°x20°)
○	NY	• NY - Narrow Elliptical (10°x40°)
○	MY	• MY - Medium Elliptical (10°x60°)
	INPUT OPTIONS	
○	CC	• CC - Constant current
○	24	• 24 - 24VDC
	CONTROL	
○	P	• P - PWM Operation
	FINISH	
○	W	• W - RAL9003 Structure (Signal White)
○	S	• S - RAL7044 Structure (Silky Grey)
○	A	• A - RAL7016 Structure (Antracite Grey)
○	B	• B - RAL9005 Structure (Jet Black)
○	D	• D - RAL 1015 Structure (Desert Sand)
○	G	• G - RAL 6002 Structure (Leaf Green)

	INTERNAL LIGHT CONTROL	
○	0	• 0 - No internal light control
○	1	• 1 - Microlouvre
○	2	• 2 - Hex louvre
○	3	• 3 - Discrete sight
○	4	• 4 - Half moon
○	5	• 5 - Honeymoon
	EXTERNAL LIGHT CONTROL	
○	0	• 0 - No external light control
○	1	• 1 - Snoot
	INSTALLATION TYPE	
○	B	• B - Base
○	E	• E - Spike
○	F	• F - Tree Strap
○	G	• G - Pole Base
	CABLE LENGTH OPTIONS	
○	00	• 0.5 - standard feed cable 0.5m (1,6')
○	03	• 3 - with 3m (10') feed cable
○	06	• 6 - with 6m (20') feed cable
○	09	• 9 - with 9m (30') feed cable
○	15	• 15 - with 15m (50') feed cable
○	20	• 20 - with 20m (65') feed cable

www.filixlighting.com
info@filixlighting.com
Filix reserves the right to make technical changes without notice.

Faro Round 35

MANDATORY ACCESSORIES

Power supplies

DRIVERS

LINK

- List of available drivers

OPTIONAL ACCESSORIES

Various accessories

VARIOUS

203953

- 203953 - Safety wire rope

Faro Round 35

INSTALLATION DETAILS

Fixture

Die-cast aluminium projector for façade, architectural, landscape, and accent lighting, built for harsh outdoor use with IK08 tempered glass and IP66/IP67 protection. Double-protected finish (anodised base + Qualicoat Seaside powder coat) and a 0.5 m oil- and water-resistant feed cable are standard, with integrated Flow Sense, Heat Sense, Split & Seal, and power protection for long-term reliability. DMX/DALI/0–10V/mains control is supported with a compatible LED power supply.

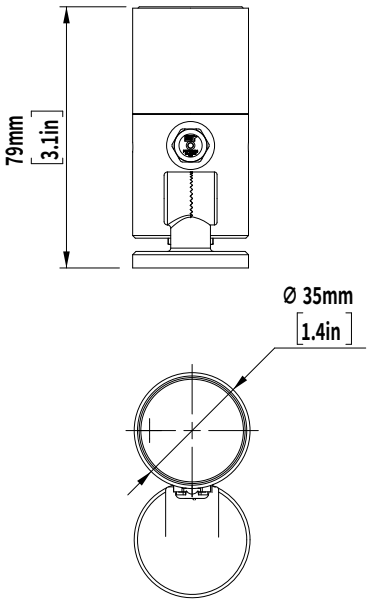

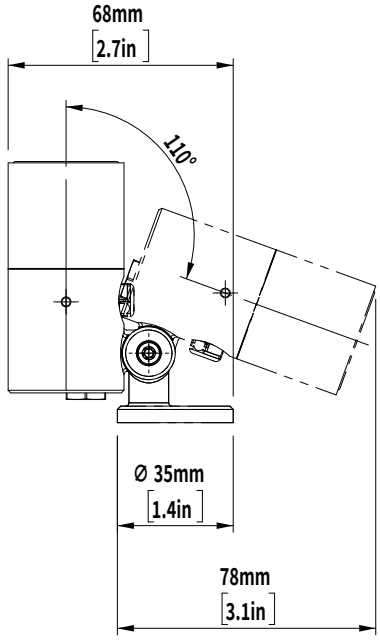

Spike installation

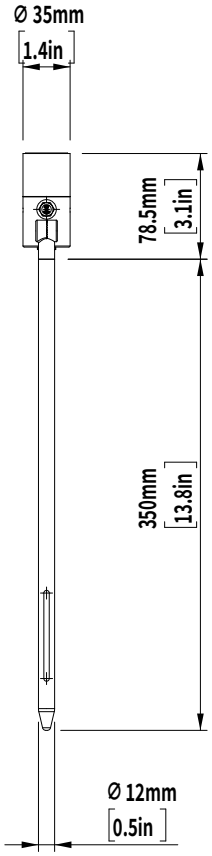

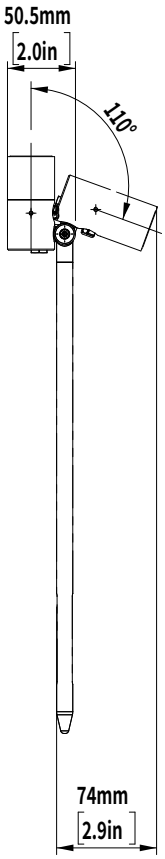

Tree strap/pole installation

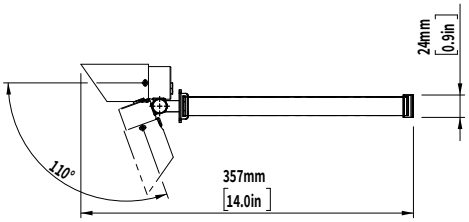

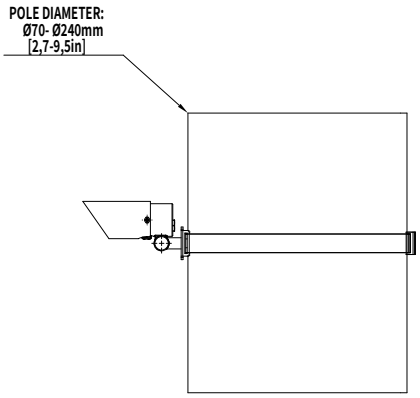

www.filixlighting.com
info@filixlighting.com

Filix reserves the right to make technical changes without notice.

Faro Round 35

MANDATORY ACCESSORIES

Power supply

A LED power supply, is an electrical device designed to control the power supplied to an LED or an array of LEDs. It plays a critical role in LED lighting systems as LEDs demand a specific type and level of electrical current or voltage for optimal operation. It's important to note whether a constant current or constant voltage LED power supply is required. The power supply should be installed in a dry and easily accessible area.

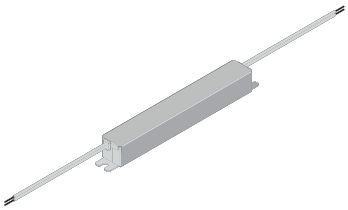

OPTIONAL ACCESSORIES

Safety wire rope

300mm long safety bond for added security during high-altitude installations.

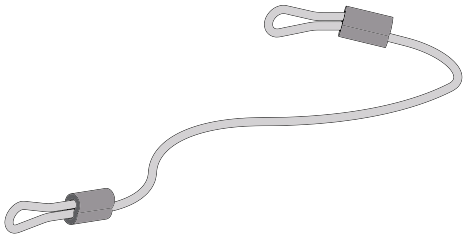

Filix reserves the right to make technical changes without notice.

Faro Round 35

INTERNAL LIGHT CONTROL

Microlouvre

Provides low glare control with 30% lesslumen output than product without louvres.best for use where pedestrians are at least6m (20ft) from the light source.

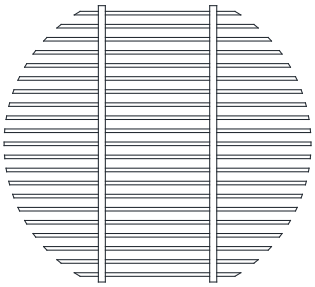

Hex louvre

Provides low glare control with 45% less lumen output than product without louvres. Best for use when there is no need for segment beam cut off such as in half moon.

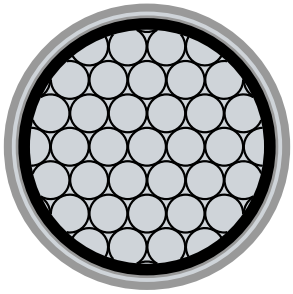

Discrete sight

Provides low glare control with 60% less lumenoutput than product without louvres. best foruse in high trafic areas where pedestirans areat least 0,5m (1,64ft) away from the source.

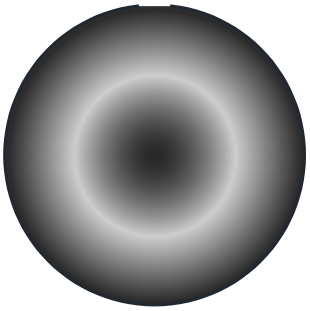

Halfmoon

Provides glare control by reducing lumen output and implementing a light beam cut-off, resulting in a 50% reduction in stray light and minimized light dispersion in undesirable directions.

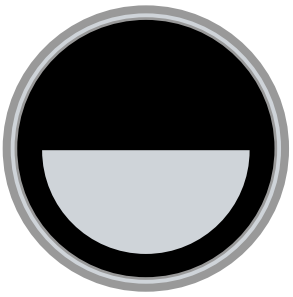

Honeymoon

Combines the benefits of Hex Louvre and Halfmoon, offering both reduced glare and controlled light dispersion for comprehensive glare management.

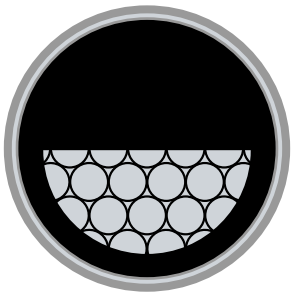

Faro Round 35

EXTERNAL LIGHT CONTROL

Snoot

External attachment providing enhanced glare control, effectively shielding the light source to reduce direct glare and prevent light spill in unwanted directions.

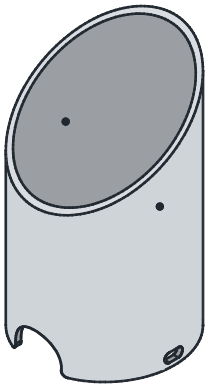

Faro Round 35

INSTALLATION OPTIONS

Base installation

Securely mounts the projector on a stable base, integrating wiring for a clean and permanent setup, ideal for environments requiring stable installations.

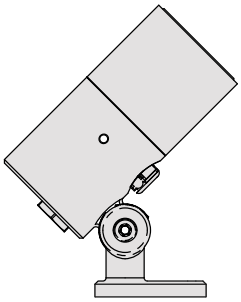

Spike installation

Ground spike-based setup allows easy insertion into the soil, perfect for flexible outdoor applications and landscape lighting.

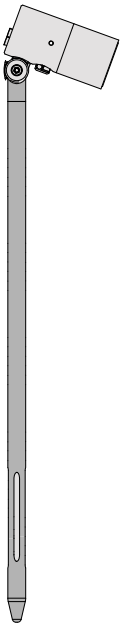

Tree strap installation

Adjustable metal strap secures the projector to a tree or branch, providing a versatile, non-invasive installation for natural settings.

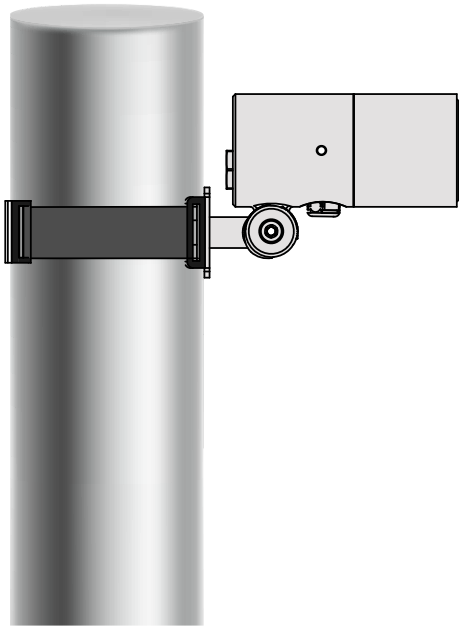

Pole base installation

Attaches the projector to a pole with an integrated wiring base, suitable for elevated, stable installations like street lighting.

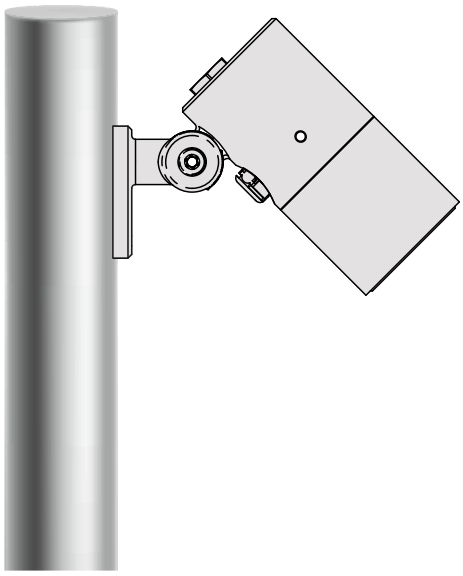

Faro Round 35

OPTICS

Narrow Spot
Angle: 8°x8°
Delivered lumen: 315lm

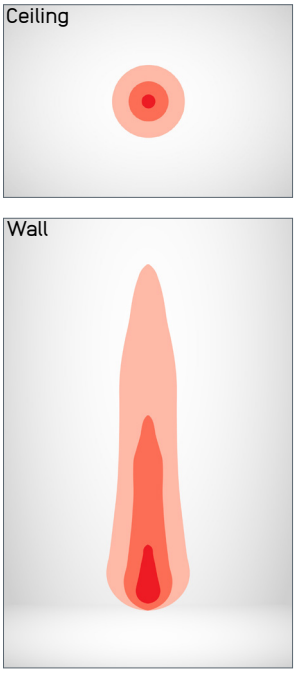

Medium Spot
Angle: 15°x15°
Delivered lumen: 300lm

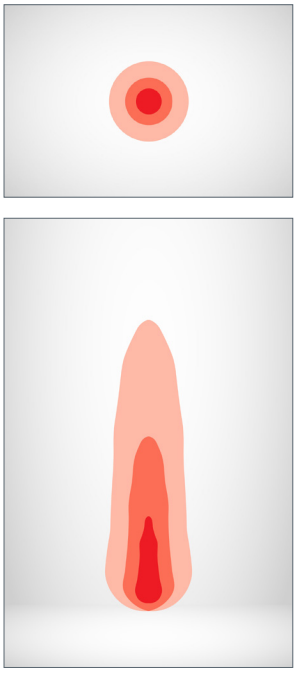

Narrow Flood
Angle: 30°x30°
Delivered lumen: 290lm

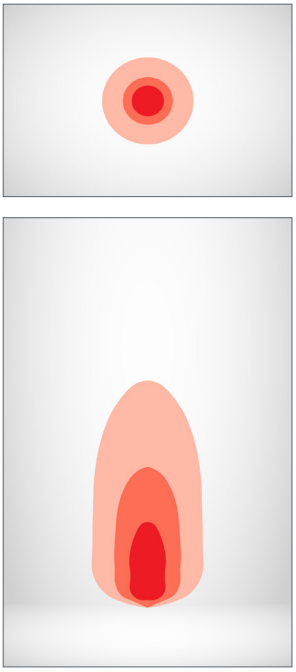

Medium Flood
Angle: 40°x40°
Delivered lumen: 260lm

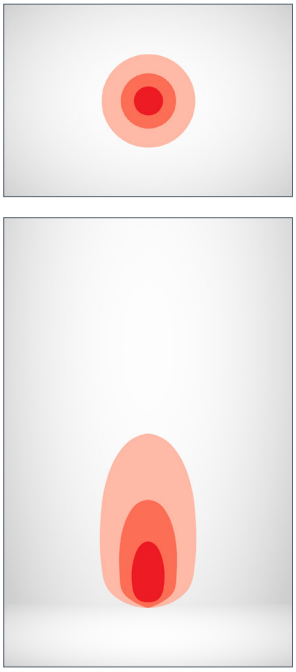

Wide
Angle: 60°x60°
Delivered lumen: 240lm

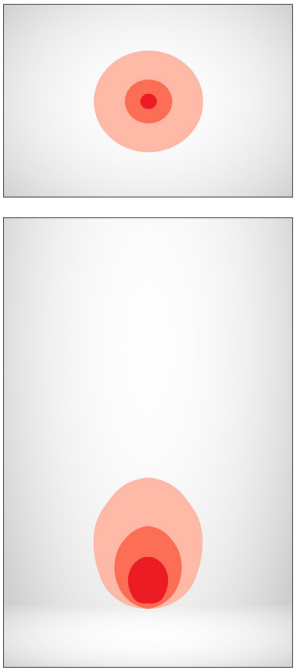

Spot Elliptical
Angle: 10°x20°
Delivered lumen: 275lm

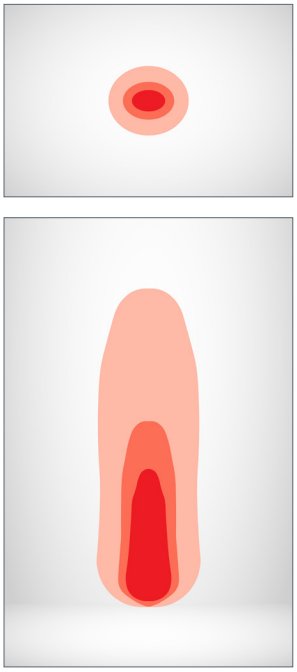

Narrow Elliptical
Angle: 10°x40°
Delivered lumen: 270lm

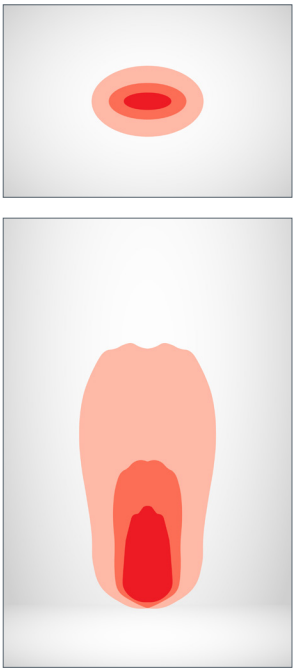

Medium Elliptical
Angle: 10°x60°
Delivered lumen: 260lm

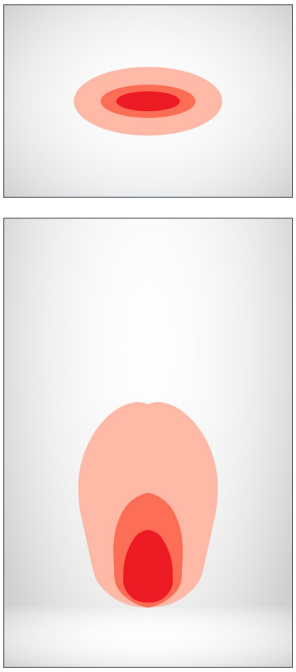

Notes

- Light output values based on 3W and 3000K product

www.filixlighting.com
info@filixlighting.com
Filix reserves the right to make technical changes without notice.

Control

PWM SYSTEM TOPOLOGY - CONSTANT VOLTAGE

System components

- The luminaire is supplied with a factory-installed feed cable in standard lengths for connection to the PSU circuit, and mounting hardware as specified in the installation instructions.
- A remote constant voltage power supply (12V / 24V DC), DC distribution cabling between the PSU and luminaires (if required), junction boxes, connection infrastructure, and the control system (DALI, DMX, 0–10V or switching) must be provided by the installer or customer.
- Recomended components:
  - Surge protection on the AC side of the PSU
  - Appropriately sized DC cabling to limit voltage drop
  - Connectors and junction boxes suitable for the installation environment

System topology

- In the system design, any of the following system topologies can be utilized: line wiring, star wiring, or tree wiring.

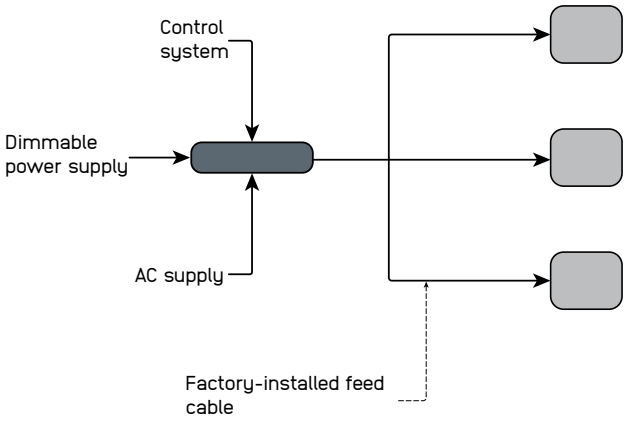

Addresing & dimming notes

- Constant voltage systems use a parallel connection topology typical for constant voltage lighting systems. Distribution layouts may include star topology, tree topology, or daisy-chain distribution.
- Individual device or channel addressing can be achieved by connecting each product to a separate output channel of the DALI or DMX dimmable power supply.
- The PSU adjusts output power according to the control signal using PWM dimming.
- Dimming options depend on the PSU and the selected control system.

Segment length and limitations

- The minimum controllable segment is one product
- Maximum cable length and number of luminaires depend on the PSU, total system wattage, conductor cross-section, and acceptable voltage drop.
- Voltage drop must remain within 10% of the nominal input voltage to ensure uniform light output.
- Dimming options depend on the PSU and the selected control system.

Fault tolerance

- Failure of the control system or communication bus does not interrupt luminaire operation if the PSU continues to supply power.
- Failure of one luminaire does not affect other luminaires connected to the same distribution line due to the parallel connection topology.
- System reliability depends on correct PSU sizing and proper electrical installation.

Control

SYSTEM TOPOLOGY - CONSTANT CURRENT

System components

- The luminaire is supplied with a factory-installed feed cable in standard lengths for connection to the PSU circuit, and mounting hardware as specified in the installation instructions.
- A compatible constant current LED driver, series connection cabling between the driver and luminaires, junction boxes, connection infrastructure, and the control system (DALI, DMX, 0–10V or switching) must be provided by the installer or customer.
- Recomended components:
  - Surge protection on the AC side of the driver
  - Connectors and junction boxes suitable for the installation environment
  - Drivers with compatible dimming interfaces required by the project

System topology

- Constant current systems use a series connection topology where luminaires are connected sequentially within a single driver circuit.

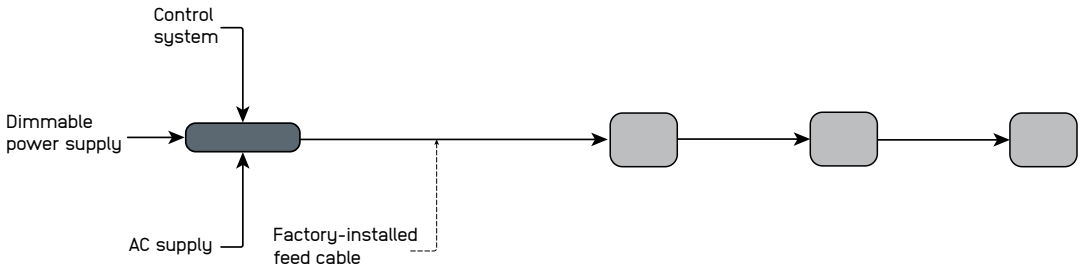

Addresing & dimming notes

- Individual device or channel addressing can be achieved by connecting each product to a separate output channel of the DALI or DMX compatible driver.
- The PSU adjusts output current according to the control signal.
- Dimming options depend on the PSU and the selected control system.

Segment length and limitations

- The minimum controllable segment is one product
- Maximum number of luminaires depends on the driver output current and total forward voltage of the connected luminaires
- The total forward voltage must remain within the driver operating range

Fault tolerance

- Failure of the control system or communication bus does not interrupt luminaire operation if the driver continues to supply current.
- Failure of one luminaire may interrupt operation of the entire circuit due to the series connection topology.
- System reliability depends on correct driver selection and proper electrical installation.