FILIX

FILIX LIGHTING USA INC

TECHNOLOGY

Data Pulse
Advanced control and power for precise dimming and efficient signal handling.

Data Whisper
Automates address assignment for DMX lighting in the Data Pulse network, ensuring easy setup and system reliability.

Color Shout
Enhances LED brightness and color saturation, efficiently managing power for fewer, high-quality luminaires.

X Line
Efficiently distributes power and data in lighting systems, simplifying installation and enhancing energy efficiency.

Split & Seal
Uses protective polymers to shield Filix products from water and moisture, boosting durability and resilience.

Heat Sense
Automatically reduces LED power at high temperatures, ensuring longevity and safety in Filix products.

RDD200

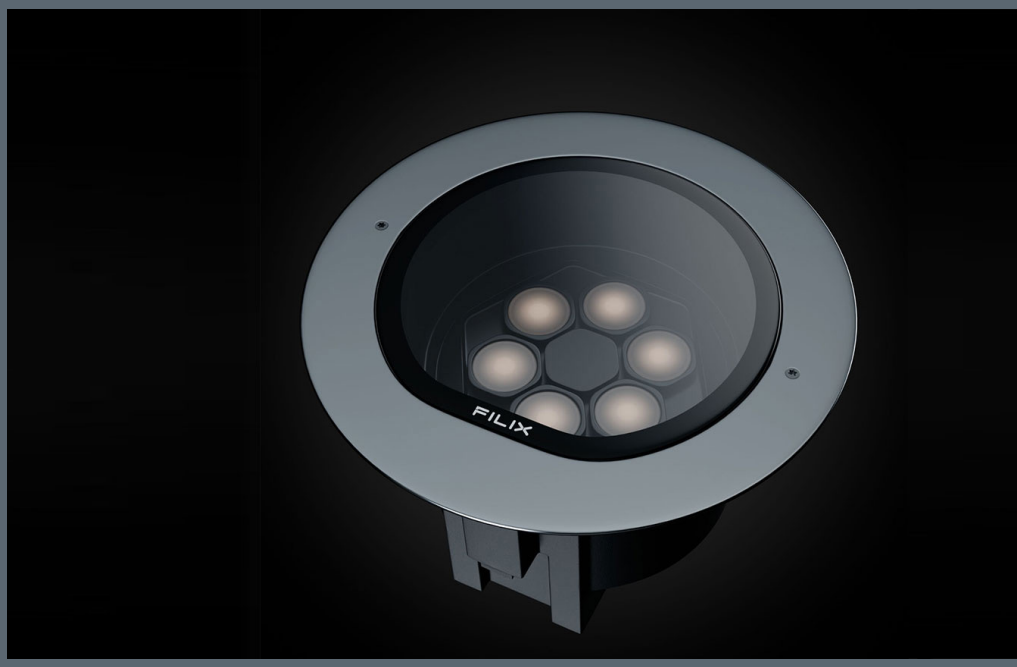

ASHRAE/IEC 90.1 Compliant
Defines energy efficiency standards for building design, focusing on insulation, HVAC, and sustainable energy use.

Qualicoat Seaside Class Powder Coat
Enhanced powder coating for aluminum, specifically formulated for superior durability and optimal performance in marine environments, lasting for over 10 years.

RDD200

Specification Sheet

ETL Intertek (Pending)
IP67

LUMINAIRE FEATURES

Design and Application

- Facade lighting
- Architectural lighting
- Landscape lighting
- Residential projects

Mechanical details

- IK10 crystal-clear tempered glass, 15mm (0.59") thick
- IP67, rated for temporary submersion (30min) in water up to 1m
- Die-Cast aluminium body
- AISI304 stainless steel flange in frosted finish
- Double surface protected body with anodised base layer and powder coat top layer in Qualicoat Seaside standard
- Drive-over rated for 5000 kg (11000 lbs)
- Supplied with IP68 connectors as a standard
- Recessed installation secured by A2 grade screws
- LED hight adjustment

Electrical details

- LED Lifetime TM-21 @ 105° CL80(24K)=145,000 hours
- Operating temperature -40°C (-40°F) to +50°C (122°F)
- LED CRI: >85
- Safety Class II
- On site LED module replacement
- On site engine replacement

Sustainability

- 91% Recayclable
- 95% Repairable

Controls

- DMX (Data Pulse)
- DALI
- 0-10V

Integrated Systems:

- Data Whisper
- Colour Shout
- X Line
- Split & Seal
- Heat Sense

Links and Downloads

- Fixure installation manual
- Housing installation manual
- CAD file
- IES-LTD data

filixlighting.com
info@filixlighting.com
Filix reserves the right to make technical changes without notice.

RDD200

ORDERING INFORMATION

	MODEL	
●	FRD20	
	INSTALLATION	
○	T	• T - Trim
	POWER	
○	H	• H - 30W - 2750lm
		• H - 30W - TW (2200K-4000K)
		• H - 30W - RGBW (W 3000K)
		• H - 30W - RGBA (A Amber)
	COLOR TEMP.	
○	AM	• AM - Amber
○	27	• 27 - 2700K
○	30	• 30 - 3000K
○	40	• 40 - 4000K
○	T6	• T6 - Tunable white 2200K-4000K
○	M4	• M4 - RGBW (W 3000K)
○	M1	• M1 - RGBA (A Amber)
	OPTICS	
○	NS	• NS - Narrow Spot 8°x8°
○	MS	• MS - Medium Spot 15°x15°
○	NF	• NF - Narrow Flood 30°x30°
○	MF	• MF - Medium Flood 40°x40°
○	W	• W - Wide 60°x60°
○	SY	• SY - Spot Asymmetric 10°x20°
○	NY	• NY - Narrow Asymmetric 10°x40°
○	MY	• MY - Medium Asymmetric 10°x60°

	VOLTAGE	
○	110	• 110 - 110-277VAC, 60Hz
○	230	• 230 - 220-240VAC, 50Hz
	CONTROL	
○	0	• 0 - ON-OFF operation
○	X	• X - DMX operation
○	D	• D - DALI operation
○	V	• V - 0-10V operation
	FINISH	
○	P	• P - Polished trim finish
○	F	• F - Frosted trim finish
	INTERNAL GLARE CONTROL	
○	0	• 0 - No internal glare control
○	1	• 1 - Microlouvre
○	2	• 2 - Hex louvre
○	3	• 3 - Discrete sight
	GLASS TYPE	
○	0	• 0 - Clear glass
○	1	• 1 - Half moon
○	2	• 2 - Anti-slip glass

filixlighting.com
info@filixlighting.com
Filix reserves the right to make technical changes without notice.

RDD200

MANDATORY ACCESSORIES

Feed Cables - art. FCUTL4P

LENGTHS	
1	• 1 - 3' feed cable
3	• 3 - 10' feed cable
6	• 6 - 20' feed cable
9	• 9 - 30' feed cable
20	• 20 - 65' feed cable

End caps

END CAPS	
104964	• 104964 - End cap

Housing

HOUSING	
RD200C	• RD200C - Technopolymer installation housing

filixlighting.com
info@filixlighting.com
Filix reserves the right to make technical changes without notice.

RDD 200

OPTIONAL ACCESSORIES

Jumper Cables - art. FJCUTL4PC

LENGTHS	
1	• 1 - 3' feed cable
3	• 3 - 10' feed cable
6	• 6 - 20' feed cable
9	• 9 - 30' feed cable
20	• 20 - 65' feed cable

Splitters - art. SUTL4P2WPDS

SPLITTERS	
P	• P - Power splitter
D	• D - Data splitter
PD	• PD - Power & Data splitter

Various Accessories

VARIOUS	
203953	• 203953 - Safety wire rope

filixlighting-usa.com
info@filixlighting-usa.com
Filix reserves the right to make technical changes without notice.

RDD200

INSTALLATION DETAILS

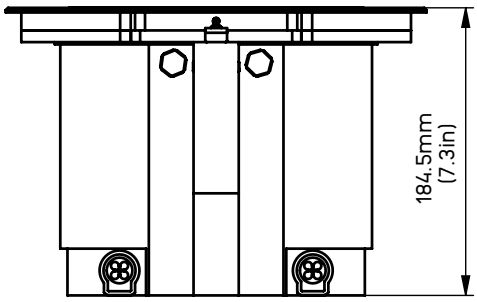

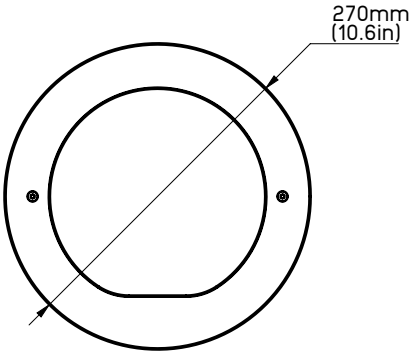

The standard luminaires are equipped with connectors, facilitating seamless line connections with feed or jumper connectors. In scenarios necessitating on-site adjustment of the LED module, an accessible IP-secured height adjustment is provided to improve glare control and ensure precise light beam performance.

LED module height adjustment

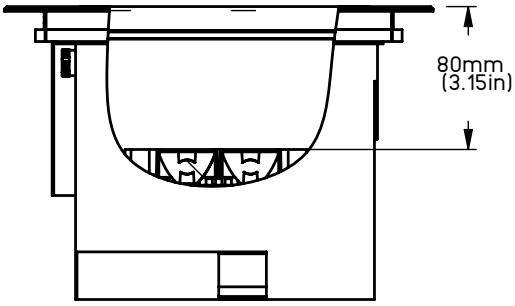

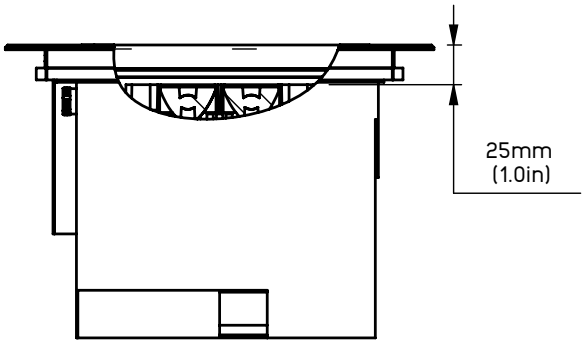

LED module height adjustment feature enables convenient on-site adjustments to be made without necessitating the removal of the glass cover. This not only ensures ease of maintenance but also preserves the integrity of the optical components, contributing to the overall efficiency and reliability of the system. Used to adjust the position of the LED module for better glare control in various applications. Positioning the LED module deeper in the body provides better glare control in areas with high traffic. A more shallow position offers higher lumen output but reduces glare control.

RDD200 is flood-proof, capable of withstanding full submersion for up to 24 hours

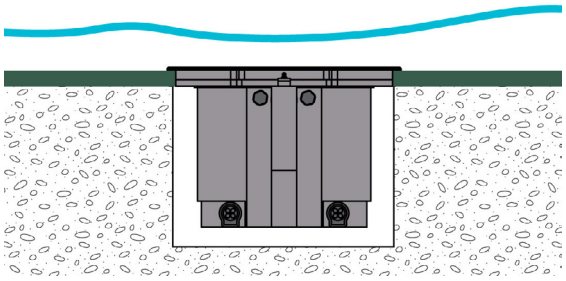

RDD200

GLARE CONTROL

Internal glare control:

Microlouvre
Provides low glare control with 30% less lumen output than product without louvres. best for use where pedestrians are at least 6m from the light source

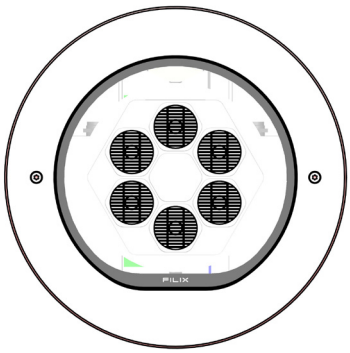

Hex louvre
Provides low glare control with 45% less lumen output than product without louvres. best for use in moderate traffic where pedestrians are at least 3m from the light source

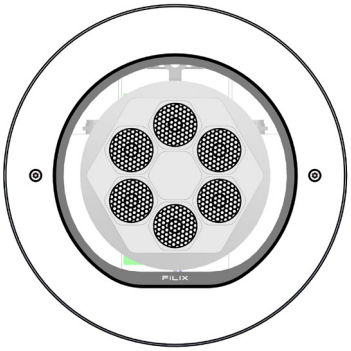

Discrete sight
Provides low glare control with 60% less lumen output than product without louvres. best for use in high trafic areas where pedestirans are at least 0,5m away from the source

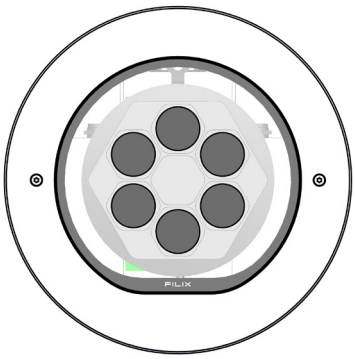

GLASS TYPE

Clear glass
Provides maximum opening for the light beam output. Used in areas where maximum fixture output is needed.

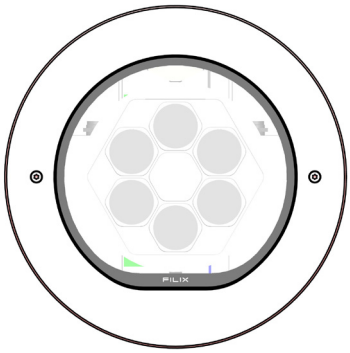

Half Moon
Provides glare control by reducing lumen output and implementing a light beam cutoff, resulting in a 50% reduction in stray light and minimized light dispersion in undesirable directions.

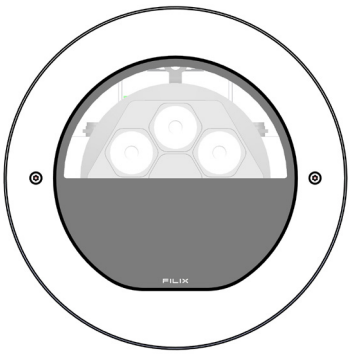

Anti Slip Glass
Designed and manufactured to reduce the risk of slipping and falling by providing a textured surface that enhances traction, even when wet.

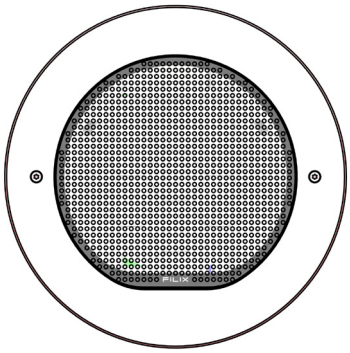

filixlighting.com
info@filixlighting.com
Filix reserves the right to make technical changes without notice.

RDD200

MANDATORY ACCESSORIES

Installation Housing
Used to install single or multiple fixtures. Made out of extruded technopolymer with multiple cable entries and and endcaps on both ends to mitigate any possiblity of concrete entry. Versatile housing offers installation near the walls while allowing "stashing" multiple meteres of cable in the plastic compartment. The housing offers the leveling option when installing on rough terains. Drainage knock out hole avaliable.

Feed cable
Length options 1m, 3m, 6m, 9m
The rugged rubber cables are versatile, with open wires for mains connection and a snap-in connector for fixture connection. They're rated IP68/IP69K and resistant to UV exposure, ideal for marine use. Note that feed cables are mandatory to order.

End cap
Endcap for receptacle, providing IP67 protection when securely locked. Required for all runs' terminations, excluding those under DMX (Data Pulse) control.

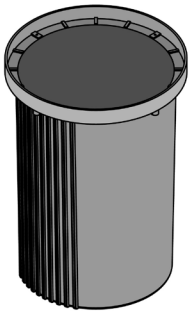

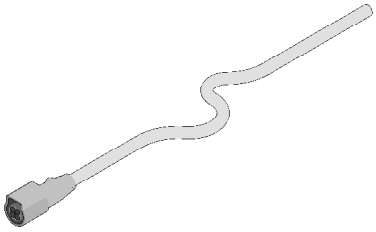

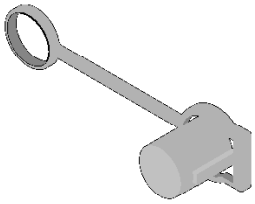

filixlighting.com
info@filixlighting.com
Filix reserves the right to make technical changes without notice.

RDD200

OPTIONAL ACCESSORIES

Jumper cable
Length options 1m, 3m, 6m, 9m
Jumper cables, a necessity for non-end-to-end configurations, feature connectors on both ends for easy connection. Constructed with robust rubber material, they endure mechanical stress and harsh environments. Rated IP68/IP69K and resistant to UV exposure, they are ideal for marine applications.

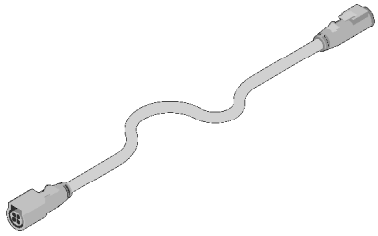

Removal tool
Equipped with a specialized suction mechanism, it securely adheres to glass surfaces, ensuring safe and precise lifting and handling operations. This tool is essential for various applications where a reliable and controlled grip is paramount, promoting efficiency and workplace safety.

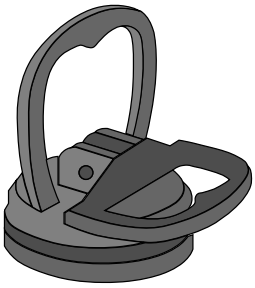

Data Splitter
A Data Splitter serves in DMX (Data Pulse) applications when there's untapped capacity on the fuse for additional fixtures. This device efficiently utilizes available resources by allowing one fuse to serve two separate DMX universes. By simplifying cabling and streamlining data flow, it optimizes lighting setup, making it more efficient and cost-effective.

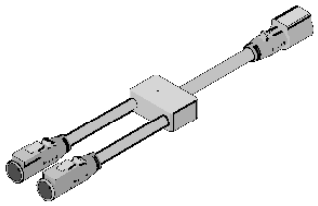

Power & Data Splitter
A Power & Data Splitter plays a crucial role in DALI, and 1-10V applications, especially when there's a requirement to establish "tree" or "star" connection topologies. This versatile splitter excels at efficiently distributing both power and data, enabling seamless branching out of your lighting system.

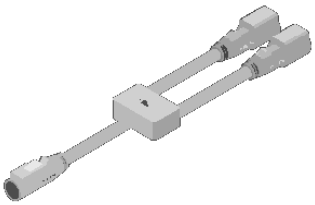

Power Splitter
A Power Splitteris crucial for handling ON/OFF applications, particularly when there's a requirement for branching connections in "tree" or "star" topologies. This splitter facilitates the effective distribution of power, guaranteeing a smooth expansion of your lighting network.

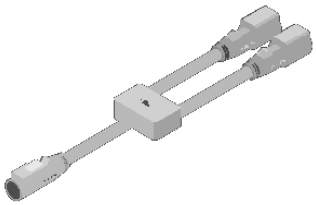

Filix reserves the right to make technical changes without notice.

RDD200

OPTICS

Narrow Spot
Angle: 8°x8°
Delivered lumen: 2625lm

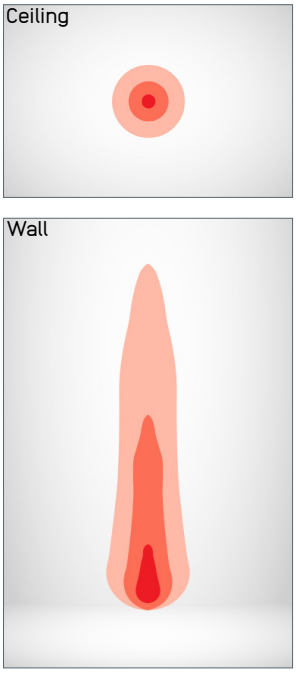

Medium Spot
Angle: 15°x15°
Delivered lumen: 2550lm

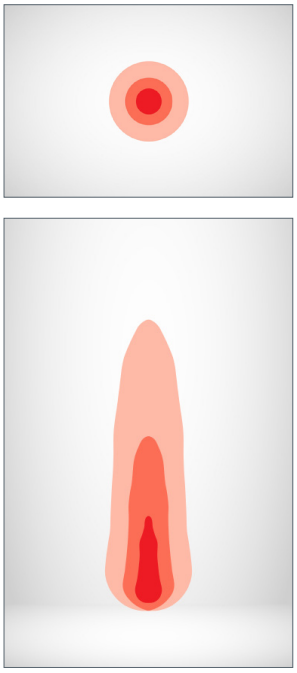

Narrow Flood
Angle: 30°x30°
Delivered lumen: 2400lm

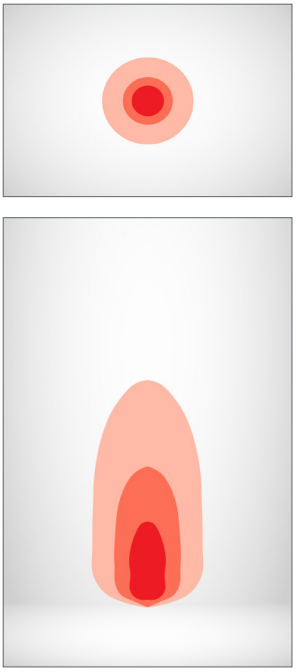

Medium Flood
Angle: 40°x40°
Delivered lumen: 2325lm

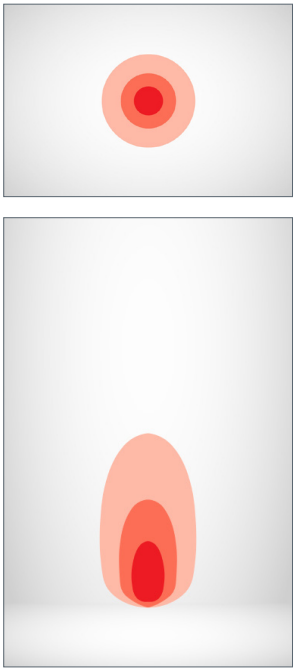

Wide
Angle: 60°x60°
Delivered lumen: 2175lm

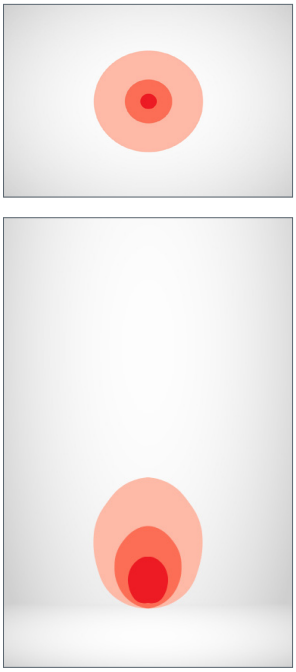

Spot Asymmetric
Angle: 10°x20°
Delivered lumen: 2550lm

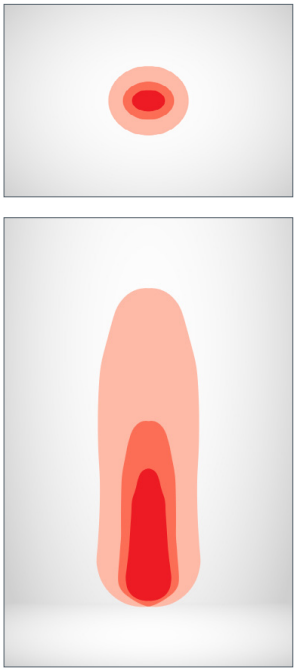

Narrow Asymmetric
Angle: 10°x40°
Delivered lumen: 2450lm

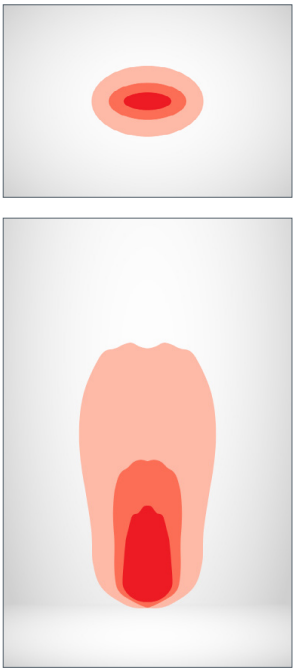

Medium Asymmetric
Angle: 10°x60°
Delivered lumen: 2300lm

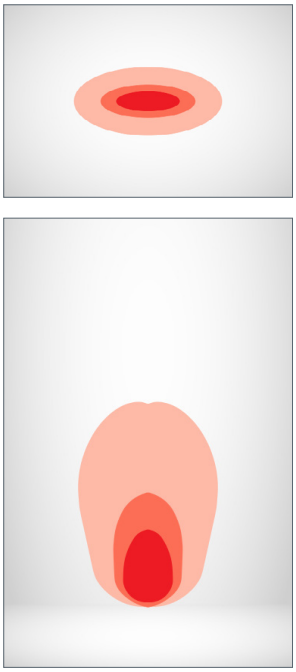

Notes

- Depending on the beam angle and power of the fixture, it has the capability to project light up to 100m (330ft)
- Light output values based on 30W and 3000K product

Control

ON/OFF SYSTEM TOPOLOGY

Integrated systems:

- X Line
- Heat Sense
- Split & Seal

System components

- Wiring, protective devices and junction boxes leading up to feed cable at the start of the line are the responsibility of others
- Feed cables and neccessarry accessories that are marked as mandatory must to be ordered separately
- For optional branching of the system Power Splitter must be used
- Advised protective components:
  - Surge protector device
  - Inrush current limiter

System topology

- In the system design, any of the following system topologies can be utilized: line wiring, star wiring, or tree wiring.

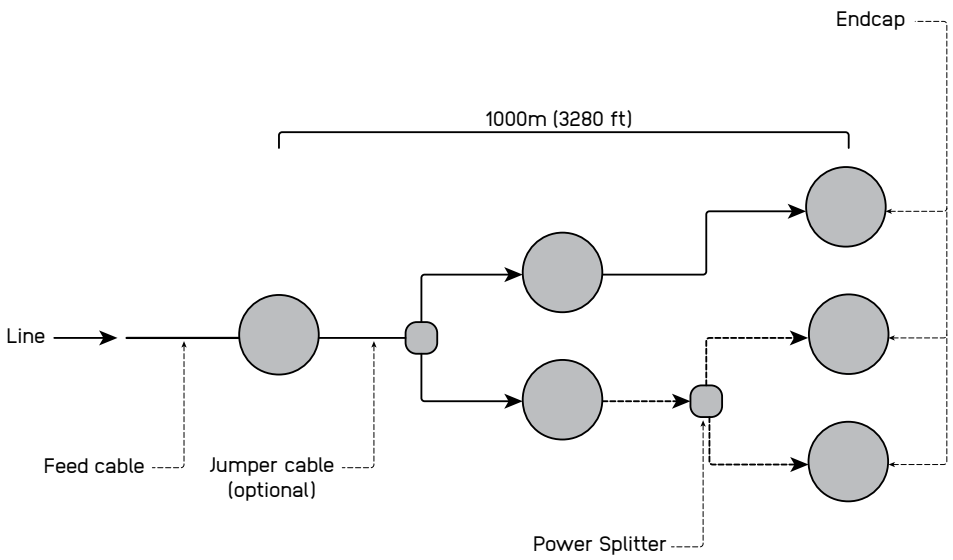

Addressing & dimming notes

- ON/OFF system does not allow device addressing
- Dimming of the product not avaliable in this system

Segment length and limitations

- The minimum segment length is equal to one product
- The maximum distance between the first and last fitting is limited to maximum voltage drop and fuse rating.
- Used only in single colour applications

Fault tolerance

- If one product fails the rest of the system continues to work
- Class I wiring implemented in the fixture and voltage fluctuation filter implemented

Control

0-10V SYSTEM TOPOLOGY

Integrated systems:

- X Line
- Heat Sense
- Split & Seal

System components

- The 0-10V system, wiring, protective devices and junction boxes leading up to feed cable at the start of the line are the responsibility of others
- Feed cables and neccessarry accessories that are marked as mandatory must to be ordered separately
- For optional branching of the system Power & Data Splitter must be used
- Advised protective components:
  - Surge protector device
  - Inrush current limiter

System topology

- In the system design, any of the following system topologies can be utilized: line wiring, star wiring, or tree wiring.

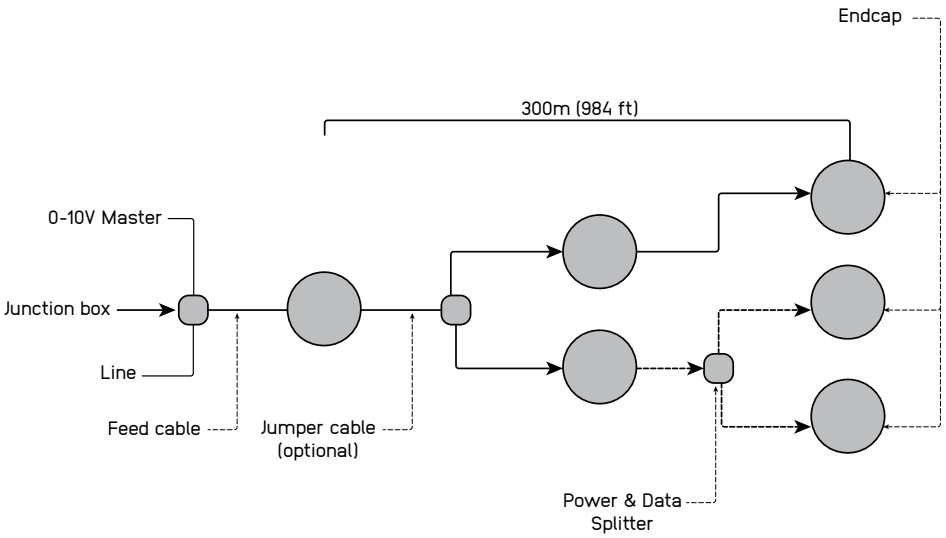

Addressing & dimming notes

- 0-10V protocol does not allow addressing devices individually
- The product is initially equipped with linear dimming settings and it is suggested for the controlers to be logarithmic in order to get the dimming that is most preferred in most cases due to the dimming curve perceived by human eye
- 0%-100% dimming range
- The product is initally set up as a source instead of as a sink type
- The product could also be set up as a sink type but this should be noted to sales represenative

Segment length and limitations

- The minimum segment length is equalt to one product
- The maximum distance between two fittings is 30 meters, and the maximum distance between the first and last fitting is 300 meters.
- Used in single colour applications

Fault tolerance

- If the product is source type and in the case the control line doesn't have power the light fitting will turn at 100%. in the opposite case where the light is sink type, light will not work.
- If one product fails the rest of the system continues to work
- Class I wiring implemented in the fixture and voltage flxtuation filter implemented

Control

DALI SYSTEM TOPOLOGY

Integrated systems:

- X Line
- Heat Sense
- Split & Seal

System components

- The DALI system, wiring, protective devices and junction boxes leading up to feed cable at the start of the line are the responsibility of others
- Feed cables and neccessarry accessories that are marked as mandatory must to be ordered separately
- For optional branching of the system Power & Data Splitter must be used
- Advised protective components:
  - Surge protector device
  - Inrush current limiter

System topology

- In the system design, any of the following system topologies can be utilized: line wiring, star wiring, or tree wiring.

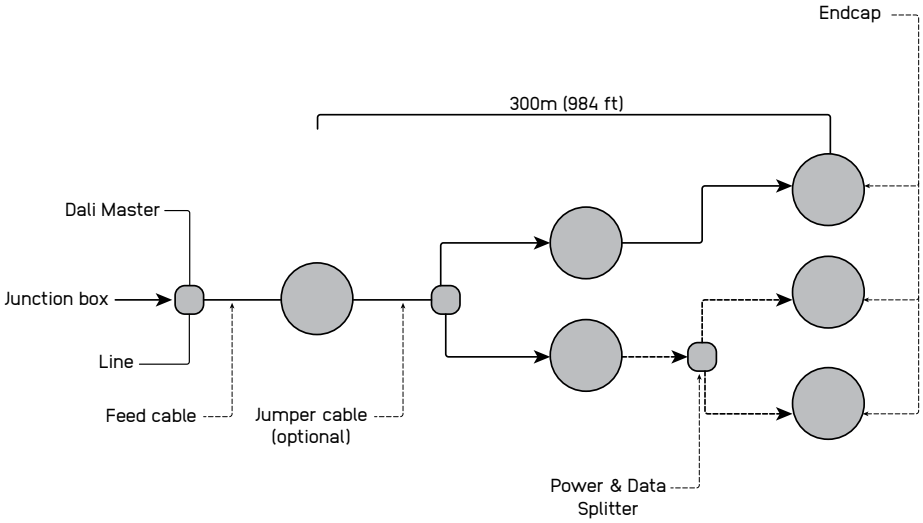

Addressing & dimming notes

- DALI protocol allows addressing devices individually
- Addressing methods include a short address for individual devices, group addresses for up to 16 groups, and a broadcast address that targets everything on the line.
- Logharitmic and linear dimming options avaliable. the product is initially equipped with logarithmic dimming settings, while you can easily switch to logarithmic dimming using a configuration device.
- 0,4%-100% dimming range

Segment length and limitations

- The minimum segment length is equal to one product
- A DALI master has the capacity to manage a line containing a maximum of 64 devices. Each device can be allocated to 16 unique groups and 16 individual scenes.
- The maximum distance between two fittings is 30 meters, and the maximum distance between the first and last fitting is 300 meters.
- Used in single colour and tunable white applications

Fault tolerance

- Due to its relatively slow operating speed and high bus voltage, the DALI system exhibits significant reliability in the presence of electrical interference, making shielding unnecessary
- If one product fails the rest of the system continues to work

Control

DMX SYSTEM TOPOLOGY

Integrated systems:

- Data Pulse: One unit for both power management and data control when utilizing the DMX protocol.
- Data Whisper
- X Line
- Colour Shout
- Heat Sense
- Split & Seal

System components

- The DMX system, wiring, protective devices and junction boxes leading up to Data Pulse at the start of the line are the responsibility of others
- Feed cables and neccessarry accessories are mandatory and must to be ordered separately
- For optional DMX address addition in the line, a data splitter must be used.
- Advised protective components:
  - Surge protector device
  - Inrush current limiter

System topology

- In the system design, line wirinig can only be used

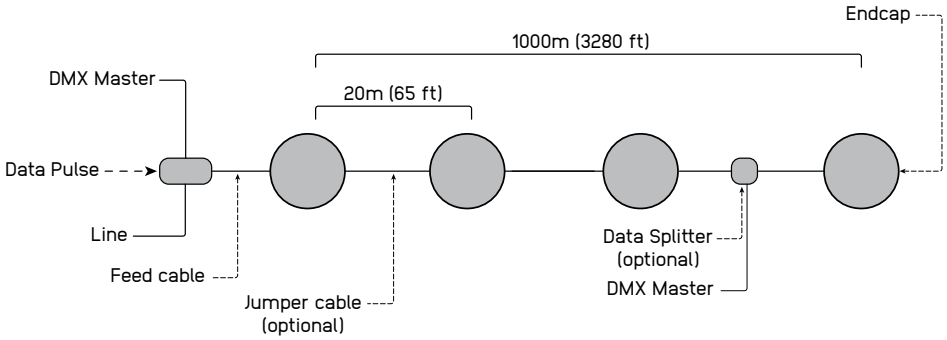

Addressing & dimming notes

- DMX protocol allows addressing devices individually
- Addressing methods allow short address for individual devices
- Logharitmic and linear dimming options avaliable. the product is initially equipped with logarithmic dimming settings, while you can easily switch to logarithmic dimming using a configuration device.
- 0%-100% dimming range

Segment length and limitations

- The minimum segment length is equal to one product.
- A DMX univerese has the capacity to manage a line containing a maximum of 512 addresses. Each Luminaire can be allocated to maximum 4 unique addresses.
- The maximum distance between two fittings is 30m (98ft), and the maximum distance between the first and last fitting is 1000 meters.
- Used in single colour, tunable white, and RGBW applications
- DMX addresses can be programmed in factory or on site. Consult your sales representative if addressing is to be done in factory

Fault tolerance

- Due to Data Pulse technology, the DMX system exhibits significant reliability in the presence of electrical interference, making shielding unnecessary
- If one product fails the rest of the system continues to work