DATA PULSE
INSTALLATION INSTRUCTIONS

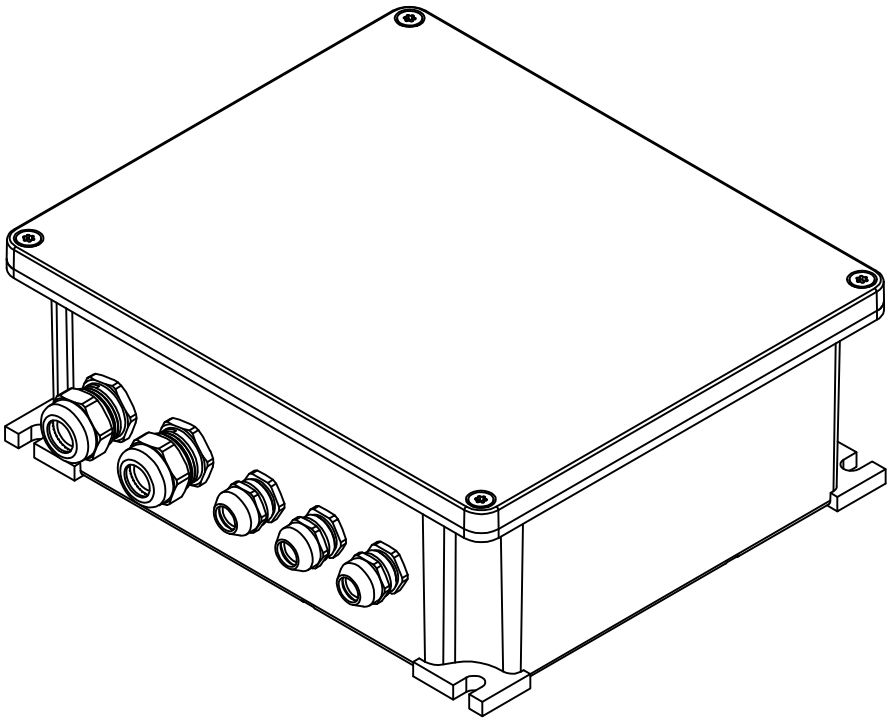

WALL

110-277 VAC 60Hz | IP66 | AL6060 | Ta | 50°C

CE

ALL DIMENSIONS ARE GIVEN ACCORDING TO THE SI SYSTEM OF UNITS (MM, KG, °C), ADDITIONAL DIMENSIONS THAT ARE WRITTEN IN BRACKETS, ARE GIVEN ACCORDING TO THE U.S. MEASUREMENT SYSTEM (IN, LBS, °F)

GENERAL REMARKS ON SAFETY

- READ ALL OF THESE INSTRUCTIONS BEFORE INSTALLATION.
- KEEP ALL OF THE INSTRUCTIONS FOR FUTURE REFERENCE.
- INSTALLATION IS TO BE PERFORMED BY A QUALIFIED CONTRACTOR.
- ALL INSTALLATIONS ARE TO CONFORM TO THE STANDARDS OF THE NATIONAL ELECTRICAL CODE AS WELL AS ALL LOCAL JURISDICTIONAL CODES AND REGULATIONS.
- THE MANUFACTURER ACCEPTS NO RESPONSIBILITY FOR DAMAGE TO PERSONS OR PROPERTY ARISING THROUGH IMPROPER USE OR INSTALLATION.
- FOR WARRANTY CONDITIONS PLEASE CONSULT LOCAL SALES REPRESENTATIVE

WIRING

WIRE MARKINGS

DATA PULSE POWER SUPPLY		DATA PULSE FIXTURE CONNECTION	
L	BLACK WIRE	L	BLACK WIRE
N	WHITE WIRE	N	WHITE WIRE
GND	GREEN WIRE	- DATA	GREEN WIRE
		+ DATA	RED WIRE

NOTE:
HIGHEST ALLOWED Uin TO BE MAX 10% OF THE NOMINAL VOLTAGE OF CONTROL GEAR. INSTALLATION OF LONGER WIRING LENGTHS SHOULD BE DISCUSSED WITH MANUFACTURER PRIOR THE FIXTURE ORDERING.
WHERE LUMINAIRE IS DELIVERED WITH CONNECTING LEADS AND WITHOUT A MEANS OF CONNECTION TO THE POWER SUPPLY TERMINAL BLOCKS MAY BE USED (TERMINAL BLOCKS NOT SUPPLIED BY MANUFACTURER). TERMINAL BLOCKS SHALL BE IN THE SAME IP RATING AS THE LUMINAIRE ITSELF, WITH RATED VOLTAGE OF MIN. 400 V AND RATED CONNECTION CAPACITY OF 16A.TERMINAL BLOCK SHOULD BE PLACED IN A LOCATION WHERE IT DOES NOT AFFECT THE LUMINAIRE OPERATION.

DIMENSIONS

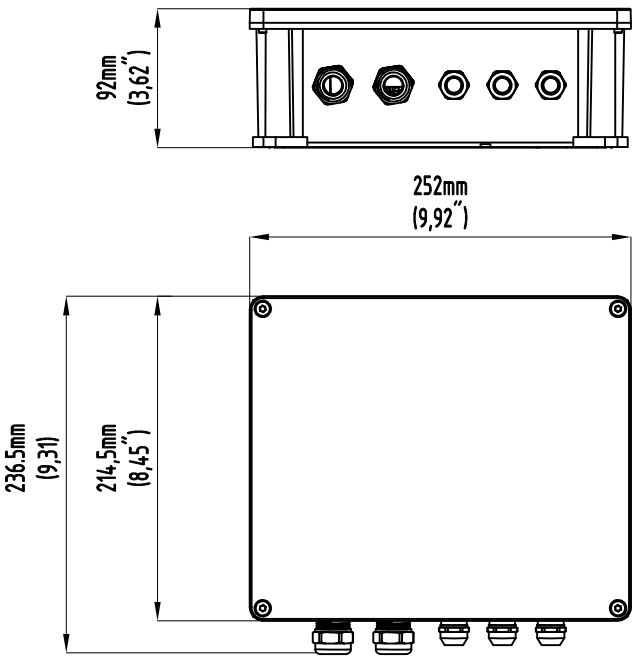

INSTALLATION GUIDE

1. MOUNT THE CONTROL GEAR AT THE DESIGNATED LOCATION. (IT IS RECOMMENDED TO USE M6 SCREWS,PLEASE NOTE THAT THE SCREWS ARE NOT SUPPLIED BY MANUFACTURER)
2. REMOVE INSTALLATION HOUSING COVER OF THE CONTROL GEAR.
3. ROUTE CABLES THROUGH THE CABLE GLAND INTO THE DATA PULSE. USE THE M20 CABLE GLAND FOR THE POWER SUPPLY AND FEED CABLE, AND THE M16 CABLE GLAND FOR THE DMX CABLE.
4. CONNECT THE CABLES AT THE DESIGNATED LOCATION, MARKED ON THE PLASTIC COVER. DMX CAN BE CONNECTED TO RJ45 SLOTS OR PUSH IN CONNECTOR. (CONNECTIONS MUST BE PERFORMED BY A QUALIFIED ELECTRICIAN).
5. IF LIGHT FIXTURES ARE CONNECTED PROCEED TO DMX ADDRESSING GUIDE.

NOTE :

TWO CAPS WILL BE PROVIDED FOR CABLE GLANDS THAT ARE NOT IN USE.

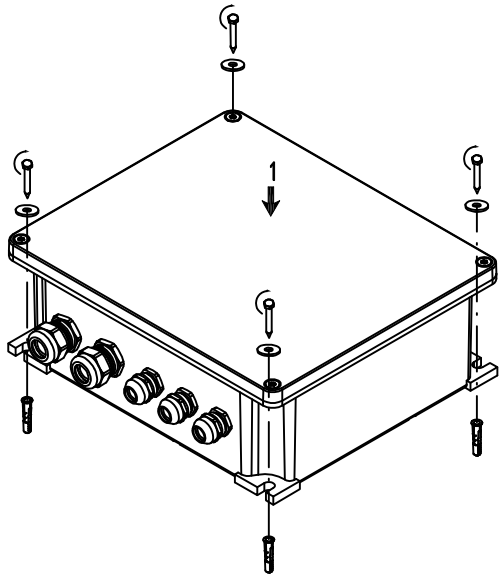

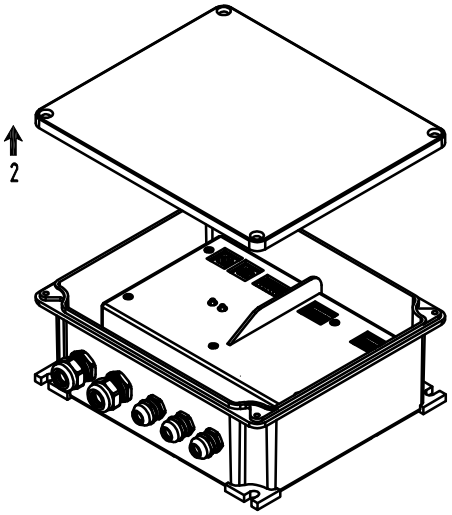

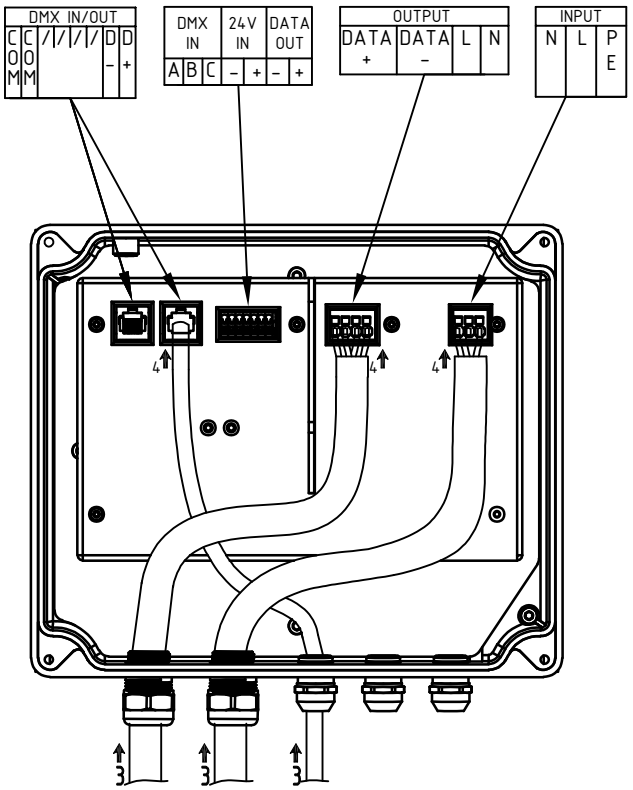

INSTALLATION GUIDE

FILIX by luminii
www.luminii.com

1. DOWNLOAD THE DMX ADDRESSING APPLICATION "DATAPULSE 1.1.3" BY SCANNING THE QR CODES BELOW.
2. INSTALL APPLICATION "DATAPULSE 1.1.3", ALLOW ACCESS TO LOCATION AND DEVICES.
3. ENABLE BLUETOOTH IN PHONE SETTINGS.

NOTE :

USE FOLLOWING QR CODE TO DOWNLOAD APPLICATION ON ANDROID PHONES OR WINDOWS DEVICES.

ANDROID QR CODE

CLICKABLE

WINDOWS QR CODE

CLICKABLE

2

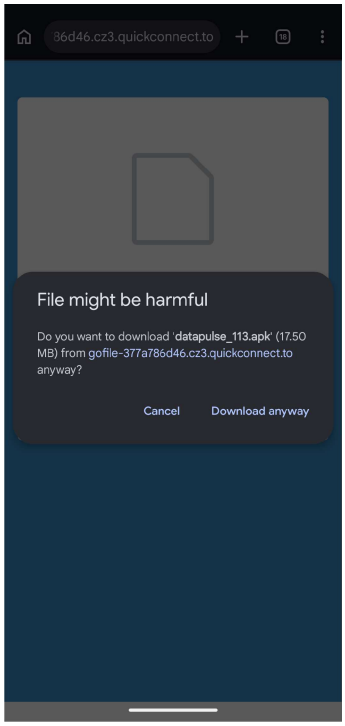

2



ADDRESSING GUIDE

FILIX by luminii
www.luminii.com

1. MAKE SURE ALL THE FIXTURES ARE PROPERLY CONNECTED.
2. OPEN THE APPLICATION, AND REFRESH THE DEVICES. (BLUETOOTH MUST BE ENABLED).
3. SELECT "DATA PULSE" FROM THE DEVICE LIST.
4. CONNECT TO DEVICE.
5. IN THE FIRST TAB PRESS "MAP" COMMAND TO GIVE THE PRODUCT THEIR DESIGNATED DMX ADDRESS.
6. IN THE SECOND TAB "CONTROL" YOU CAN TEST CONNECTED DEVICES WITH A FEW DIFFERENT OPTIONS.

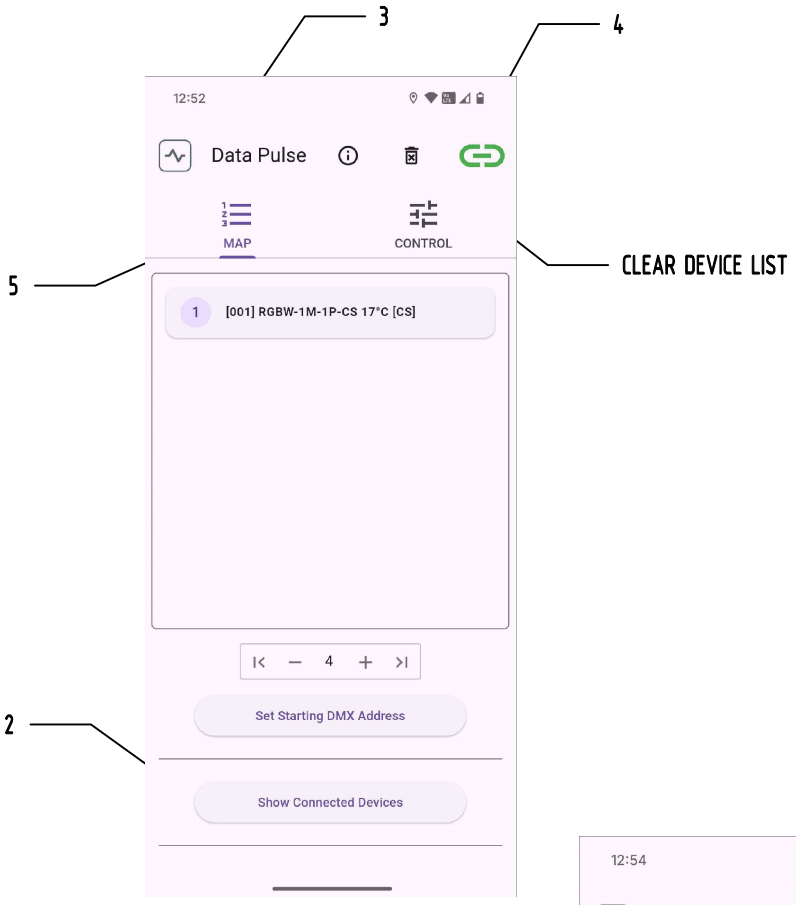

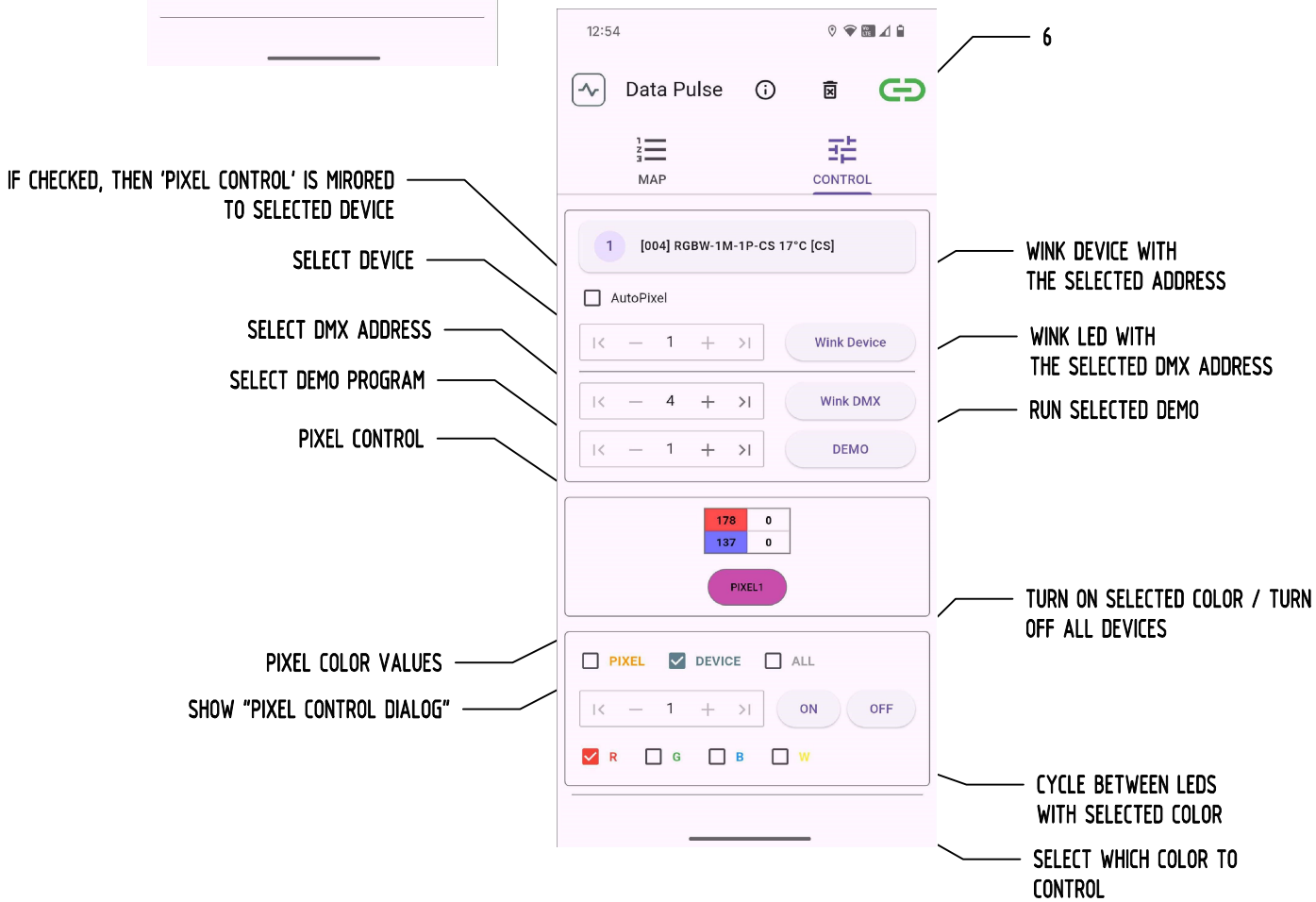

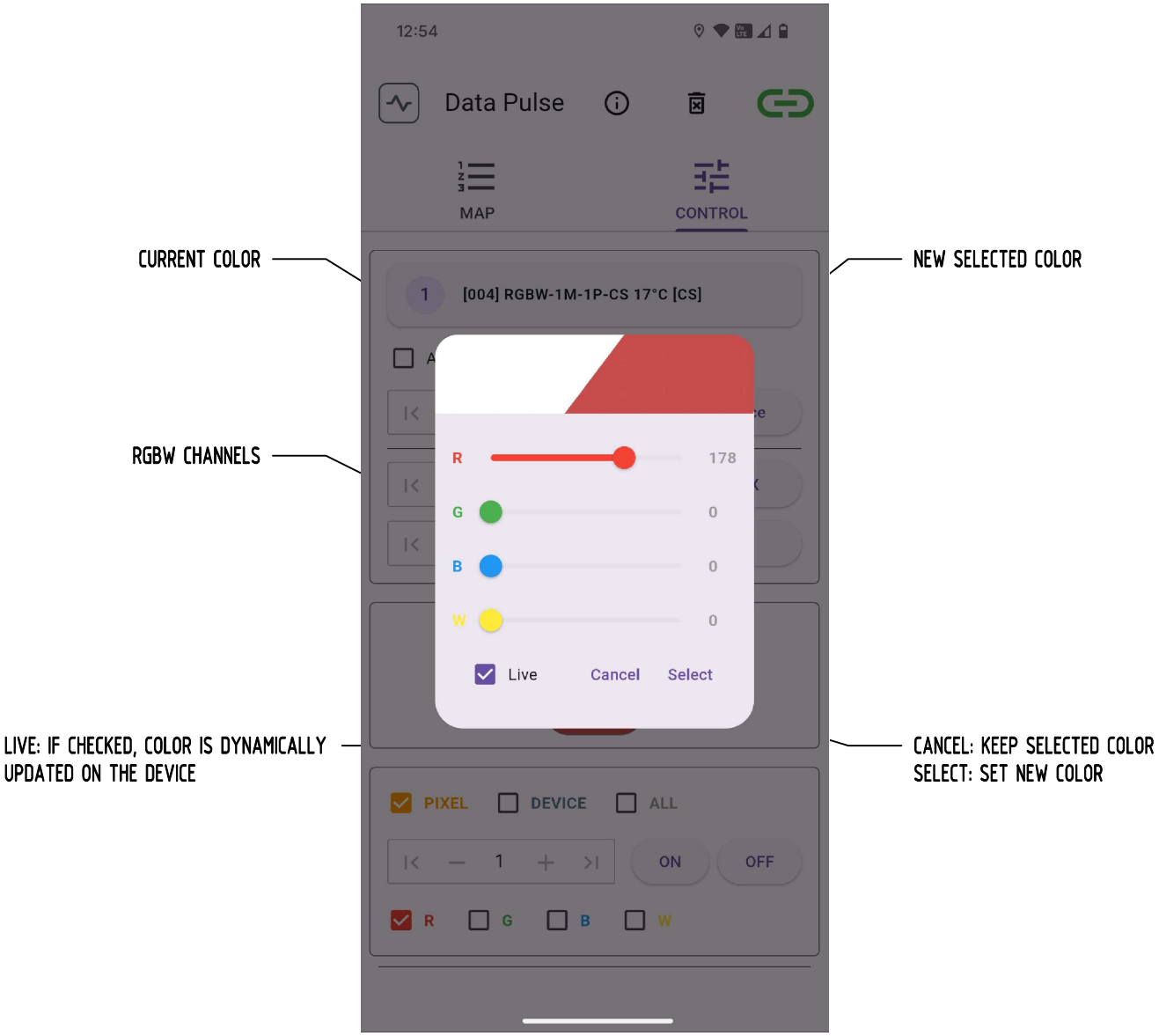
CURRENT COLOR
NEW SELECTED COLOR
RGBW CHANNELS
LIVE: IF CHECKED, COLOR IS DYNAMICALLY UPDATED ON THE DEVICE
CANCEL: KEEP SELECTED COLOR
SELECT: SET NEW COLOR
12:54
Data Pulse
MAP
CONTROL
[004] RGBW-1M-1P-CS 17°C [CS]
R 178
G 0
B 0
W 0
Live
Cancel
Select
PIXEL
DEVICE
ALL
ON
OFF